Attachment A

CITY OF CORAL GABLES
PLANNING DEPARTMENT

2012 MAY -3 AM 9:50

MERRICK MANOR

4133 LE JEUNE
CORAL GABLES, FLORIDA

ARCHITECT
BEHAR • FONT & PARTNERS, P.A.
4533 PONCE DE LEON BOULEVARD
CORAL GABLES, FLORIDA 33146
TEL (305) 740-5442
FAX (305) 740-5443

04-27-12

TABLE OF CONTENTS

1. Statement of Use / Letter of Intent
2. Neighborhood Meeting Notice, Sign In Sheet & Minutes
3. Architectural Plans
4. Traffic Study

GT GreenbergTraurig

Mario J. Garcia-Serra
(305) 579-0837
E-Mail: garcia-serram@gtlaw.com

August 22, 2011

Mr. Eric Riel
Planning Director
City of Coral Gables
405 Biltmore Way
Coral Gables, Florida 33134

Re: Merrick Manor / Site Plan and Alley Vacation Application / Statement of Use

Dear Mr. Riel:

On behalf of MCI Laguna, LLC and 4111 LeJeune LLC ("Applicant"), I respectfully submit this statement of use in connection with the Mixed Use Site Plan and Alley Vacation Application which has been submitted for the Merrick Manor mixed use project. The Applicant proposes to demolish the structures which are currently erected on the property and to construct "Merrick Manor", a 10 story mixed use project. The structure will consist of 188 high-end rental residential units with retail commercial space on the ground floor. The site is presently divided by an alley for which we seek closure to facilitate the development, and includes the City owned Trolley Building located at 4133 LeJeune Road which is the subject of a land swap proposal proposed by my client and presently being negotiated with City staff.

Applicant has submitted this application with the intent of fostering the sort of mixed use development which it believes is (1) desirable for the surrounding area, (2) compatible with the nearby "Village of Merrick Park", (3) consistent with the goals and objectives of the City's Comprehensive Plan and (4) complies with the conditional use criteria applicable to a mixed use site plan.

Benefits of Proposed Development

The area where the property is located is presently characterized by small retail and office buildings as well as the City's Trolley Building, which are all designed in a rather non-descript manner. Merrick Manor would be a significant step towards addressing the residential and commercial needs of the City in a responsible manner, by limiting the height of buildings and utilizing the mixed use concept in order to address traffic issues. This project will also serve to improve the aesthetic of the surrounding area by utilizing the Mediterranean style of architecture for which the City is known. In addition, the City will be able to relocate its Trolley facility to a site better suited to accommodate the needs of the Trolley service with a new state of the art building.

GREENBERG TRAURIG, P.A. ▪ ATTORNEYS AT LAW ▪ WWW.GTLAW.COM
333 Avenue of the Americas ▪ Suite 4400 ▪ Miami, FL 33131-3238 ▪ Tel 305.579.0500 ▪ Fax 305.579.0717

Compatibility with the Village of Merrick Park

The Village of Merrick Park was inaugurated in the fall of 2002 as a cornerstone of the effort to redevelop this area of Coral Gables. Merrick Manor would further this redevelopment effort by facilitating the development of "higher end" residential and commercial uses which are compatible with the Village of Merrick Park. The proposed project would provide luxury residential units within walking distance of Merrick Park as well as expand the high end shopping and restaurant venues in the area.

Consistency with Comprehensive Plan

The proposed development is consistent with the following Goals, Objectives and Policies of the Coral Gables Comprehensive Plan:

Goal FLU-1. Protect, strengthen, and enhance the City of Coral Gables as a vibrant community ensuring that its neighborhoods, business opportunities, shopping, employment centers, cultural activities, historic value, desirable housing, open spaces, and natural resources make the City a very desirable place to work, live and play.

Objective FLU-1.7. When amendments to the Zoning Code are processed, discourage the proliferation of urban sprawl by including a regulatory framework for encouraging future infill and redevelopment within existing developed areas. In drafting the infill/redevelopment program, the City shall coordinate public and private resources necessary to initiate needed improvements and/or redevelopment within these areas.

Policy FLU-1.7.1. Encourage effective and proper high quality development of the Central Business District, the Industrial District and the University of Miami employment centers which offer potential for local employment in proximity to protected residential neighborhoods.

Objective FLU-1.11. Maintain a pattern of overall low density residential use with limited medium and high density residential uses in appropriate areas to preserve the low intensity and high quality character of the residential neighborhoods.

Objective DES-1.1. Preserve and promote high quality, creative design and site planning that is compatible with the City's architectural heritage, surrounding development, public spaces and open spaces.

Policy DES-1.1.2. Provide for rigorous design guidelines, standards, and review processes via the City's Zoning Code that ensure high quality design of buildings and spaces.

Objective DES-1.2. Preserve the Coral Gables Mediterranean design and architecture.

Policy DES-1.2.1. Continue the award of development bonuses and/or other incentives to promote Coral Gables Mediterranean design character providing for but not limited to the following: creative use of architecture to promote public realm improvements and pedestrian amenities; provide a visual linkage between contemporary architecture and the existing and new architectural fabric; encourage landmark opportunities; and creation of public open spaces.

Policy MOB-1.1.1. Promote mixed use development to provide housing and commercial services near employment centers, thereby reducing the need to drive.

Policy MOB-1.1.2. Encourage land use decisions that encourage infill, redevelopment and reuse of vacant or underutilized parcels that support walking, bicycling and public transit use.

Policy MOB-1.1.3. Locate higher density development along transit corridors and near multimodal stations.

The proposed Merrick Manor would help to realize the above goals objectives and policies of the Comprehensive Plan by bringing a well designed high-end residential and commercial development to an area that is underutilized. The development also incorporates the relocation of the Trolley service facility to a state of the art building that will enhance the transportation needs of the community at large.

Compliance with Conditional Use Criteria

We respectfully submit that this request for Site Plan approval satisfies the review criteria of Section 3-408 of the Zoning Code as follows:

A. The proposed conditional use is consistent with and furthers the goals, policies and objectives of the Comprehensive Plan and furthers the purposes of these regulations and other City ordinances and actions designed to implement the Plan.

As stated above, the development is consistent with the Comprehensive Plan and will help realize the goal, objectives and policies thereof.

B. The available use to which the property may be put is appropriate to the property that is subject to the proposed conditional use and compatible with existing and planned uses in the area.

The proposed mixed residential and commercial use is appropriate and compatible with the surrounding area, which is characterized by residential, office, and commercial uses. Please note that the property is located within the City's Mixed Use Overlay District.

C. The proposed conditional use does not conflict with the needs and character of the neighborhood and the City.

The proposed development will not conflict with the needs and character of the neighborhood and City, but will be compatible and complimentary as discussed above.

D. The proposed conditional use will not adversely or unreasonably affect the use of other property in the area.

The proposed development will enhance the other properties in the area by increasing property values, providing new customers for existing businesses, and new retail options for existing residents.

E. The proposed use is compatible with the nature, condition and development of adjacent uses, buildings and structures and will not adversely affect the adjacent uses, buildings or structures.

The proposed mixed use is compatible with adjacent uses, buildings, and structures as discussed above and will not have an adverse impact on them.

F. The parcel proposed for development is adequate in size and shape to accommodate all development features.

The parcel is adequate to accommodate the development and is to scale with similar nearby developments.

G. The nature of the proposed development is not detrimental to the health, safety and general welfare of the community.

The proposed development is not detrimental to the health, safety, and welfare of the community. Please note that the residential and retail uses proposed do not constitute nuisances or noxious uses.

H. The design of the proposed driveways, circulation patterns and parking is well defined to promote vehicular and pedestrian circulation.

The proposed development has been designed to carefully address traffic related issues including circulation and parking.

I. The proposed conditional use satisfies the concurrency standards of Article 3, Division 13 and will not adversely burden public facilities, including the traffic-carrying capacities of streets, in an unreasonable or disproportionate manner.

The proposed project will comply with the City's concurrency standards.

In short, the proposed development will greatly benefit the area, and the City at large, by fostering development which is compatible with the rest of the City, and Merrick Park in particular, and create a mixed use neighborhood in an area which is presently unaesthetic and

disconnected, stylistically and functionally, from the rest of the City Beautiful. It will also provide for a much needed new state of the art Trolley Facility for the City which will help to enhance public transportation for all of the City's residents, visitors, and businesses. We urge your support of this request and look forward to working with you on this matter.

Sincerely,

Mario J. Garcia-Serra

GT GreenbergTraurig

Mario Garcia-Serra
Tel. (305) 579-0837
Fax (305) 961-5837
garcia-serram@gtlaw.com

February 1, 2012

INVITATION TO NEIGHBORHOOD MEETING

Re: Merrick Manor / Site Plan Approval and Alley Vacation / Property on the Northeast corner of SW 42nd Avenue and Altara Avenue

Dear Sir or Madam:

We represent the applicant in connection with the above referenced zoning application and would like to invite you to an informational neighborhood meeting where we will make a presentation of the project and solicit your thoughts and comments. The meeting will take place on February 16, 2011 at 6 p.m., at the offices of the project architects, Behar Font and Partners located at 4537 Ponce De Leon Boulevard.

Sincerely,

Mario García-Serra

Mario Garcia-Serra

MIA 182,352,606v1 1-31-12

Minutes of Merrick Manor Neighborhood Meeting

February 16, 2012

The meeting commenced at approximately 6:10 pm at the office of Behar Font and Associates. The following individuals where in attendance on behalf of the Merrick Manor project team:

- Henry Torres, Astor Development
- Peter Torres, Astor Development
- Javier Font, Project Architect
- Mario Garcia-Serra, Project Zoning Counsel

Approximately twelve (12) members of the public were in attendance. Please see attached sign in sheet and note that one member of public failed to sign the sign in sheet.

Mr. Garcia-Serra commenced the presentation of the project by describing the project site, the proposed development, and the proposed land swap. Mr. Font made a detailed presentation of the elevations, floor plans, and renderings of the Merrick Manor project. Mr. Garcia-Serra went on to describe the details of the proposed land swap, the proposed new City trolley building to be constructed, at the cost of Astor Development, as well as the financial benefits to the City of the new Merrick Manor project and the proposed land swap and new trolley building.

The members of the public in attendance asked questions regarding the new City trolley building's location, the unit size and type for the Merrick Manor project, the traffic impact of the Merrick Manor project, and the financial benefits of the proposed land swap as well as the proposed construction schedule. The project team provided responses to each of these questions. No objections to the project were raised by the public in attendance and several attendees expressed support for the project as a welcomed addition to the neighborhood which will enhance property values and provide other significant financial benefits to the City.

The meeting concluded at approximately 7 pm.

Merrick Manor Neighborhood Meeting / February 16, 2012

Name	Address	Signature
STEVEN SCHAUFF	9955 N KENDALL DR SE 205	
J.S. Rashid	3628 Grand Av Coconut Grove	
Jeanne Bridge	424 Almira Avenue	
ROBERT E. STONE	425 Cadaqua Ave Coral Gables, FL	
Luis Espino	3709 SEGOVIA C. Gab 33134	
Brad Richter	4569 Ponce de Leon	
LAURA RUSSO	2655 LeJeune Rd PH 2-B. C. Gables FL	
Jim Dockerty	4210 Ponce	
DW A Mason	532 San Fe Ln	
Leona C. Baker	201 Wash. Dr.	Leona C. Baker
Edwina Prime	141 Fla. Ave	Edwina Prime

AERIAL

SCALE : N.T.S.

BEHAR · FONT & PARTNERS, P.A.

ARCHITECTURE
PLANNING
INTERIORS

Certification No. AA0002451

4533 PONCE DE LEON BLVD.
Coral Gables, Florida 33146
TEL: (305) 740-5442
FAX: (305) 740-5443
E-MAIL: info@beharfont.com

© 2011 BEHAR FONT & PARTNERS P.A.
THE DESIGN AND DRAWINGS FOR THIS PROJECT ARE THE PROPERTY OF THIS ARCHITECT AND ARE PROTECTED UNDER THE COPYRIGHT PROTECTION ACT.

SEAL :

Javier Font AR No. 12547

CONSULTANT :

CLIENT:

PROPOSED MIXED-USE BUILDING
MERRICK MANOR
4133 LE JEUNE ROAD
CORAL GABLES, FLORIDA

OWNER :

DATE:
03-12-2012

REVISIONS:

PROJECT No.
11-011

DRAWN BY:
-

CHECKED BY:
JF

SCALE:
AS SHOWN

SHEET No.
CP-1.dwg
OF

CONTEXTUAL MASSING MODEL

SCALE : N.T.S.

BEHAR · FONT & PARTNERS P.A.

ARCHITECTURE
PLANNING
INTERIORS

Certification No. AA0002451

4533 PONCE DE LEON BLVD.
Coral Gables, Florida 33146
TEL: (305) 740-5442
FAX: (305) 740-5443
E-MAIL: info@beharfont.com

© 2011 BEHAR FONT & PARTNERS P.A.
THE DESIGN AND DRAWINGS FOR THE PROJECT ARE THE PROPERTY OF THIS ARCHITECT AND ARE PROTECTED UNDER THE COPYRIGHT PROTECTION ACT.

SEAL :

Javier Font AR No. 12547

CONSULTANT :

CLIENT:

PROPOSED MIXED-USE BUILDING
MERRICK MANOR
4133 LE JEUNE ROAD
CORAL GABLES, FLORIDA

OWNER :

DATE:
03-12-2012

REVISIONS:

PROJECT No.
11-011

DRAWN BY:
-

CHECKED BY:
JF

SCALE:
AS SHOWN

SHEET No.
CP-2.dwg
OF

1

2

3

4

5

6

7

8

9

10

11

12

13

14

15

16

17

18

19

20

21

22

23

24

25

26

27

28

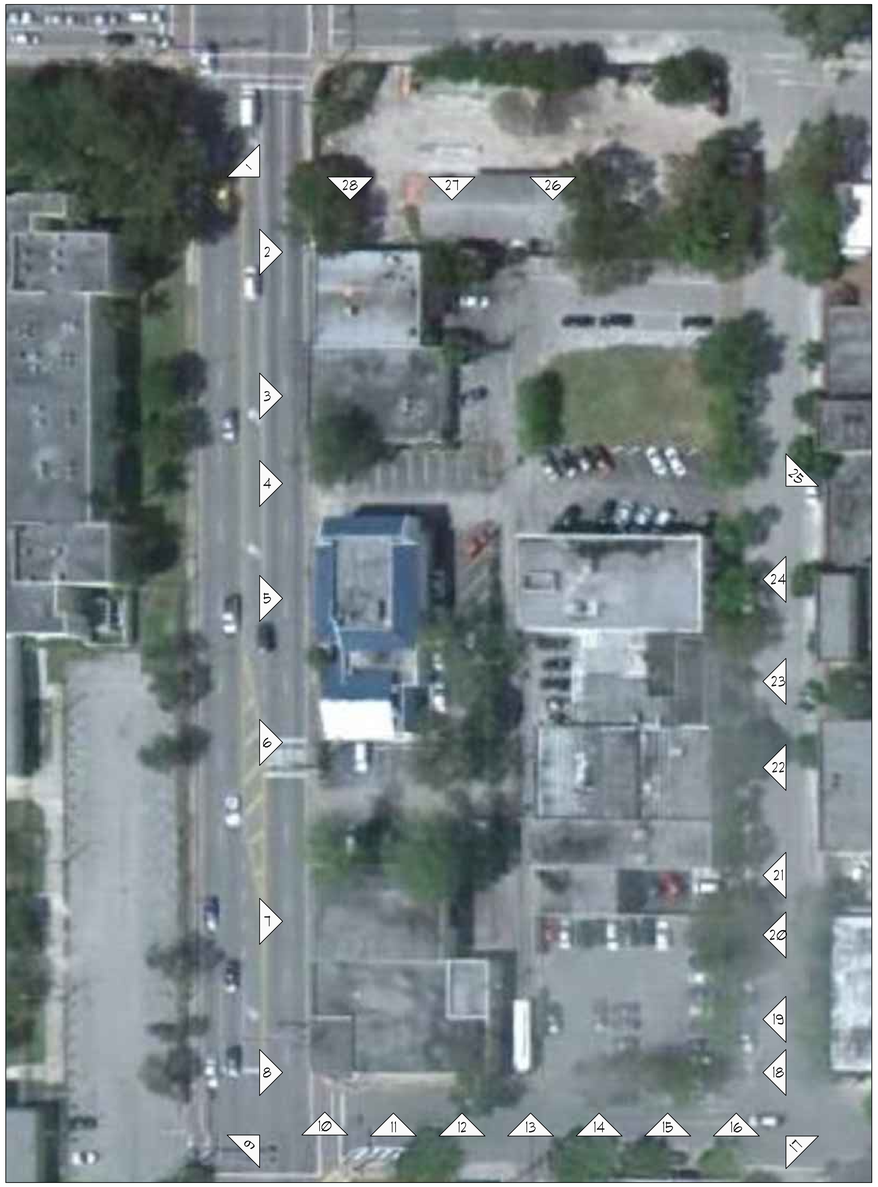

AERIAL & SITE PICTURES

N.T.S.

BEHAR · FONT & PARTNERS P.A.

ARCHITECTURE
PLANNING
INTERIORS

Certification No. AA0002451

4533 PONCE DE LEON BLVD.
Coral Gables, Florida 33146
TEL: (305) 740-5442
FAX: (305) 740-5443
E-MAIL: info@beharfont.com

© 2011 BEHAR FONT & PARTNERS P.A.
THE DESIGN AND DRAWINGS FOR THE PROJECT ARE THE PROPERTY OF THIS ARCHITECT AND ARE PROTECTED UNDER THE COPYRIGHT PROTECTION ACT.

SEAL :

Javier Font AR No. 12547

CONSULTANT :

CLIENT:

PROPOSED MIXED-USE BUILDING
MERRICK MANOR
4133 LE JEUNE ROAD
CORAL GABLES, FLORIDA

OWNER :

DATE:
03-12-2012

REVISIONS:

PROJECT No.
11-011

DRAWN BY:
-

CHECKED BY:
JF

SCALE:
AS SHOWN

SHEET No.
CP-3.0 AE
OF

RENDERING

SCALE : N.T.S.

BEHAR · FONT & PARTNERS P.A.

ARCHITECTURE
PLANNING
INTERIORS

Certification No. AA0002451

4533 PONCE DE LEON BLVD.
Coral Gables, Florida 33146
TEL: (305) 740-5442
FAX: (305) 740-5443
E-MAIL: info@beharfont.com

© 2011 BEHAR FONT & PARTNERS P.A.
THE DESIGN AND DRAWINGS FOR THIS PROJECT ARE PROPERTY OF THIS ARCHITECT AND ARE PROTECTED UNDER THE COPYRIGHT PROTECTION ACT.

SEAL :

Javier Font AR No. 12547

CONSULTANT :

CLIENT:

PROPOSED MIXED-USE BUILDING
MERRICK MANOR
4133 LE JEUNE ROAD
CORAL GABLES, FLORIDA

OWNER :

DATE:
03-12-2012

REVISIONS:

PROJECT No.
11-011

DRAWN BY:
-

CHECKED BY:
JF

SCALE:
AS SHOWN

SHEET No.
CP-4.0
OF

RENDERING

SCALE : N.T.S.

BEHAR · FONT & PARTNERS P.A.

ARCHITECTURE
PLANNING
INTERIORS

Certification No. AA0002451

4533 PONCE DE LEON BLVD.
Coral Gables, Florida 33146
TEL: (305) 740-5442
FAX: (305) 740-5443
E-MAIL: info@beharfont.com

© 2011 BEHAR FONT & PARTNERS P.A.
THE DESIGN AND DRAWINGS FOR THE PROJECT ARE THE PROPERTY OF THIS ARCHITECT AND ARE PROTECTED UNDER THE COPYRIGHT PROTECTION ACT.

SEAL :

Javier Font AR No. 12547

CONSULTANT :

CLIENT:

PROPOSED MIXED-USE BUILDING
MERRICK MANOR
4133 LE JEUNE ROAD
CORAL GABLES, FLORIDA

OWNER :

DATE:
03-12-2012

REVISIONS:

PROJECT No.
11-011

DRAWN BY:
-

CHECKED BY:
JF

SCALE:
AS SHOWN

SHEET No.
CP-5.0
OF

LEGAL DESCRIPTION

ZONING INFORMATION

PROJECT NAME:	MERRICK MANOR
PROPERTY ADDRESS:	4133 LEJEUNE RD.
ZONING:	" C " & " I " W/ MXD OVERLAY
NET LOT AREA SITE :	61,010.90 SQ. FT.
NET LOT AREA ALLEY :	4,699.27 SQ. FT.
NET LOT AREA:	65,710.17 SQ. FT. (1.508 ACRES)

MAXIMUM UNITS	ALLOWED/REQUIRED	PROVIDED
(1.508 ACRES) 125 UNITS/ACRE x 1.508 = 188.5 1 BEDROOM UNITS : 81 2 BEDROOM UNITS : 79 3 BEDROOM UNITS : 20	188.625	180

MAXIMUM F.A.R CORAL GABLES : 3.0 MEDITERRANEAN BONUS : 0.5	ALLOWED/REQUIRED	PROVIDED
SITE F.A.R. 61,010.90 X 3.5 : 213,523 ALLEY F.A.R. 4,699.27 X 3.5 : 16,447.44 (NEW ACCESS EASEMENT) = PROVIDED = 3,296 SQ. FT.	213,538 SQ FT = (92.85%) 16,447 SQ. FT. = (7.15%)	
2 TOTAL	229,985 SQ. FT.	229,557 SQ. FT.

PROPOSED BUILDING F.A.R.		RESIDENTIALS, RETAILS, LOBBY , CORRIDORS, ELEV. LOBBIES , STAIRS, RESTROOMS , ELECT. & MECH. ROOMS.
GROUND	RETAIL #1 = 8948 SQFT. RETAIL #2 = 2783 SQFT OFFICE = 5021 SQFT. OFFICE # 120 = 900 SQFT. FIRE COMM. = 116 SQFT SECURITY = 73 SQFT. PANTRY = 240 SQFT PARCEL STORE ROOM = 62 SQFT. COMM. ROOM = 143 SQFT. METER ROOM = 141 SQFT MATINANCE / STORAGE = 407 SQFT. FIRE PUMP = 300 SQFT DOMESTIC WATER = 205 SQFT. ELECTRICAL ROOM = 465 SQFT FPL VAULT = 825 SQFT. DISPLAY WINDOW 1 = 12 SQFT DISPLAY WINDOW 2 = 12 SQFT.	20,663 SQFT.
4 5 2nd RESIDENTIAL		13,955 SQ.FT.
4th & 3th RESIDENTIAL	3nd= 14,787 SF 4th= 14,787 SF	29,574 SQ.FT.
5tH RESIDENTIAL		39,643 SQ.FT.
6tH THRU 7TH RESIDENTIAL	6th= 40,439 SF 7th= 40,439 SF	80,878 SQ.FT.
8tH RESIDENTIAL		15,569 SQ.FT.
9tH THRU 10TH RESIDENTIAL	9th= 14,931 SF 10th= 14,096 SF	29,027 SQ.FT.
TOTAL		229,557 SQ. FT.

BUILDING SETBACKS

	ALLOWED/REQUIRED	PROVIDED
FRONT (ALTARA AVENUE)	0'-0" UP TO 45' IN HEIGHT 15'-0" IF OVER 45' IN HEIGHT (SETBACK REDUCTION)	0'-5" AT BASE 10'-2" AT TOWER
SIDE STREET (LAGUNA STREET)	0'-0" UP TO 45' IN HEIGHT 15'-0" IF OVER 45' IN HEIGHT (SETBACK REDUCTION)	1'-7" AT BASE 10'-1" AT TOWER
SIDE STREET (LE JEUNE ROAD)	0'-0" UP TO 45' IN HEIGHT 10'-0" IF OVER 45' IN HEIGHT	0'-9" AT BASE 10'-0" AT TOWER
INTERIOR SIDE (ADJ. PROPERTY) LAGUNA STREET SIDE	0'-0"	0'-5" AT BASE 5'-0" AT TOWER
INTERIOR SIDE (ADJ. PROPERTY) LE JUNE STREET SIDE	0'-0"	4'-7" AT BASE 5'-2" AT TOWER
REAR ABUTTING ALLEY (EXISTING ALLEY)	0'-0"	5'-11" AT BASE 14'-10" AT TOWER

TOTAL LOT COVERAGE	59,522 SQ, FT,
TOTAL OPEN SPACE	6,188.17 SQ, FT,

GREEN AREA	ALLOWED/REQUIRED	PROVIDED
GROUND LEVEL (ON-SITE) @ GROUND FLOOR - SOFTSCAPE W/IN PROPERTY. 2,435 SQ.FT. @ GROUND FLOOR - HARDSCAPE (PERVIOUS PAVERS) 4,272 SQ.FT.		6,707
GROUND LEVEL (OFF-SITE) **NOT INCLUDED IN TOTAL		1,449
RECREATIONAL LEVEL		1,953
TOTAL	6,571	8,660**

PARKING	ALLOWED/REQUIRED	PROVIDED
1 BEDROOM, 2 BEDROOMS UNITS = 160 @ 1.75	280	280
3 BEDROOMS UNITS = 20 @ 2.25	45	45
3 4 OFFICE/RETAIL PARKING (1 PER 250 SQFT.) 18,467 SQFT./250 = 73.868	73.868	74
1 ADDITIONAL PARKING		18
1 TOTAL	399	417
TOTAL HC PARKING 2% of total 418 SPACES	8	8 **
** INCLUDED IN TOTAL		

LOADING SPACES	ALLOWED/REQUIRED	PROVIDED
	2	2

TANDEM PARKING ASSIGNMENT

UNIT	PARKING SPACES
207	2-46 / 2-47
208	2-48 / 2-49
211	2-50 / 2-51
212	2-52 / 2-53
307	2-54 / 2-55
308	2-56 / 2-57
311	2-58 / 2-59
312	2-60 / 2-61
407	2-62 / 2-63
408	2-64 / 2-65
411	2-66 / 2-67
412	2-68 / 2-69
504	2-70 / 2-71
509	2-72 / 2-73
510	2-74 / 2-75
513	2-76 / 2-77
514	2-78 / 2-79
516	2-13 / 2-14
519	2-11 / 2-12
526	3-61 / 3-62
528	3-63 / 3-64
604	3-65 / 3-66
610	3-67 / 3-68
611	3-69 / 3-70
612	3-71 / 3-72
616	3-73 / 3-74
617	3-75 / 3-76
618	3-77 / 3-78
621	3-79 / 3-80
624	3-81 / 3-82
626	3-83 / 3-84
631	3-85 / 3-86
633	3-87 / 3-88
704	3-89 / 3-90
709	3-91 / 3-92
710	3-93 / 3-94
711	3-30 / 3-31
712	3-28 / 3-29
716	4-61 / 4-62
717	4-63 / 4-64
718	4-65 / 4-66
721	4-67 / 4-68
724	4-69 / 4-70
726	4-71 / 4-72
731	4-73 / 4-74
733	4-75 / 4-76
804	4-77 / 4-78
810	4-79 / 4-80
811	4-81 / 4-82
812	4-83 / 4-84
904	4-85 / 4-86
910	4-87 / 4-88
911	4-89 / 4-90
912	4-91 / 4-92
1010	4-93 / 4-94
1011	4-30 / 4-31
1012	4-28 / 4-29
TOTAL TANDEM	114
TOTAL SINGLE	303
TOTAL PARKING	417

ZONING CHART

ARCHITECTURE
PLANNING
INTERIORS
Certification No. AA0002451

4533 PONCE DE LEON BLVD
Coral Gables, Florida 33146
TEL: (305) 740-5442
FAX: (305) 740-5443
E-MAIL: info@beharfont.com

© 2011 BEHAR FONT & PARTNERS P.A.
THE DESIGN AND DRAWINGS FOR THIS PROJECT ARE THE PROPERTY OF THIS ARCHITECT AND ARE PROTECTED UNDER THE COPYRIGHT PROTECTION ACT.

SEAL :

Javier Font AR No. 12547
CONSULTANT :

CLIENT:

OWNER :

BEHAR · FONT & PARTNERS P.A.

PROPOSED MIXED-USE BUILDING
MERRICK MANOR
4133 LE JEUNE ROAD
CORAL GABLES, FLORIDA

DATE:
04-27-2012

REVISIONS:
1 01/31/12 ZONNING DEPT.
2 02/20/12 PUBLIC WORKS DEPT.
3 03/14/12 PLANNING DEPT.
4 04/02/12 ZONNING DEPT.
5 04/13/12 ZONNING DEPT.

PROJECT No.
11-011
DRAWN BY:
-
CHECKED BY:
JF
SCALE:
AS SHOWN
SHEET No.
A-0.00
OF

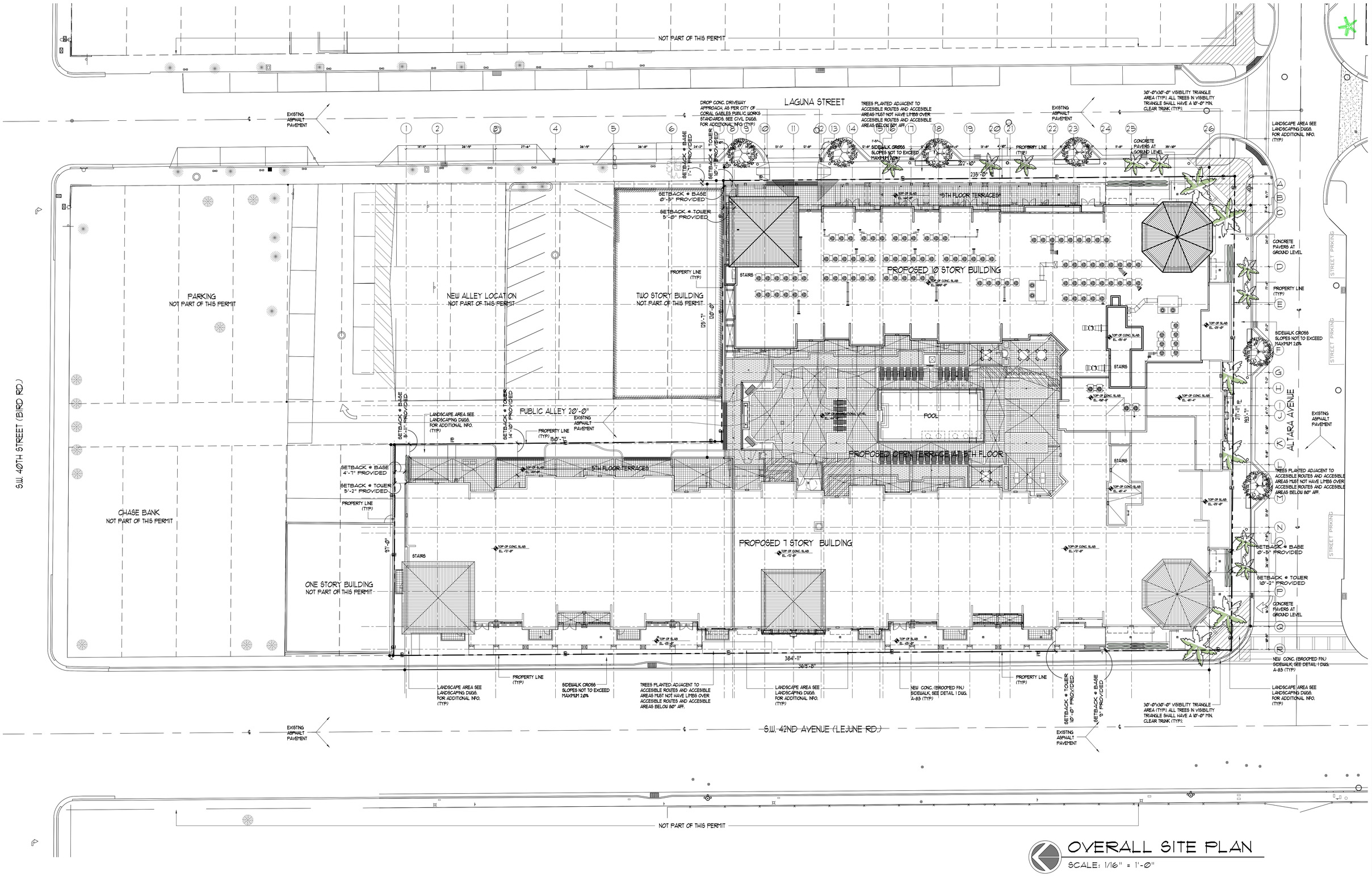

OVERALL SITE PLAN

SCALE: 1/16" = 1'-0"

ARCHITECTURE
PLANNING
INTERIORS

Certification No. AA0002451

4533 PONCE DE LEON BLVD.
Coral Gables, Florida 33146
TEL: (305) 740-5442
FAX: (305) 740-5443
E-MAIL: info@beharfont.com

© 2011 BEHAR FONT & PARTNERS P.A.
THE DESIGN AND DRAWINGS FOR THE PROJECT ARE THE PROPERTY OF THIS ARCHITECT AND ARE PROTECTED UNDER THE COPYRIGHT PROTECTION ACT.

SEAL :

Javier Font AR No. 12547

CONSULTANT :

CLIENT :

OWNER :

DATE:
04-27-2012

REVISIONS:

PROJECT No.
11-011

DRAWN BY:
-

CHECKED BY:
JF

SCALE:
AS SHOWN

SHEET No.
A-0.1

OF

BEHAR · FONT & PARTNERS P.A.

PROPOSED MIXED-USE BUILDING
MERRICK MANOR
4133 LE JEUNE ROAD
CORAL GABLES, FLORIDA

RETAIL FRONTAGE TABULATION

STREET	REQUIRED	PROVIDED
LEJEUNE ROAD	369.00 L.F. x 50 = 184.50 L.F.	330.43 L.F.
ALTARA AVENUE	193.58 L.F. x 40 = 77.43 L.F.	93.84 L.F.
LAGUNA STREET	222.83 L.F. x 40 = 89.13 L.F.	102.08 L.F.
TOTAL	351.06 L.F.	526.35 L.F.
MIXED USE PERCENTAGES REQUIREMENT AS PER 4-201.A CITY OF CORAL GABLES ZONING CODE		
8% OF BUILDING AREA (F.A.R.) 229,380 SQFT. x 8% = 18,350 SQFT.	18,350.00 SQFT.	18,452.00 SQFT.

LEGEND

- TOTAL NET LOT AREA = 65,705 S.F.
- TOTAL LOT COVERAGE = 59,522 S.F.
- TOTAL ARCADE AREA = 10,513 S.F.
- TOTAL PLAZA AREA = 1,260 S.F.
- OTHER OPEN AREA = 6,047 S.F.

TOTAL GREEN AREA = 8,660 SQFT.

GREEN AREA
GROUND FLOOR 6,707 SQFT.
RECREATIONAL FLOOR 1,953 SQFT.
GREEN AREA REQUIRED 10% OF 65,710 SQFT. 6,571 SQFT
TOTAL

NOTE:

1. ALL FOUNTAIN AND REFLECTING POOLS ARE TO HAVE A MAXIMUM DEPTH OF (18) INCHES.
2. ALL AWNINGS/CANOPIES AND BUILDING SIGNAGE WILL BE UNDER A SEPARATE PERMIT.
3. ALL SURROUNDING LANDSCAPED AREAS TO BE IRRIGATED AND REFLECTED ON BUILDING UTILITY METER.
4. (6") RAISED CURBING SHALL BE PROVIDED ON ALL STREETS ABUTTING THIS USE CURB CUTS AND RAMPS FOR HANDICAPPED ACCESS SHALL ALSO BE PROVIDED AT ALL STREET INTERSECTIONS AND POINTS OF PEDESTRIAN CROSSING.
5. LANDSCAPED AREAS SURROUNDING BUILDING TO BE LIT. SEE SHEET L-1 FOR DETAILS

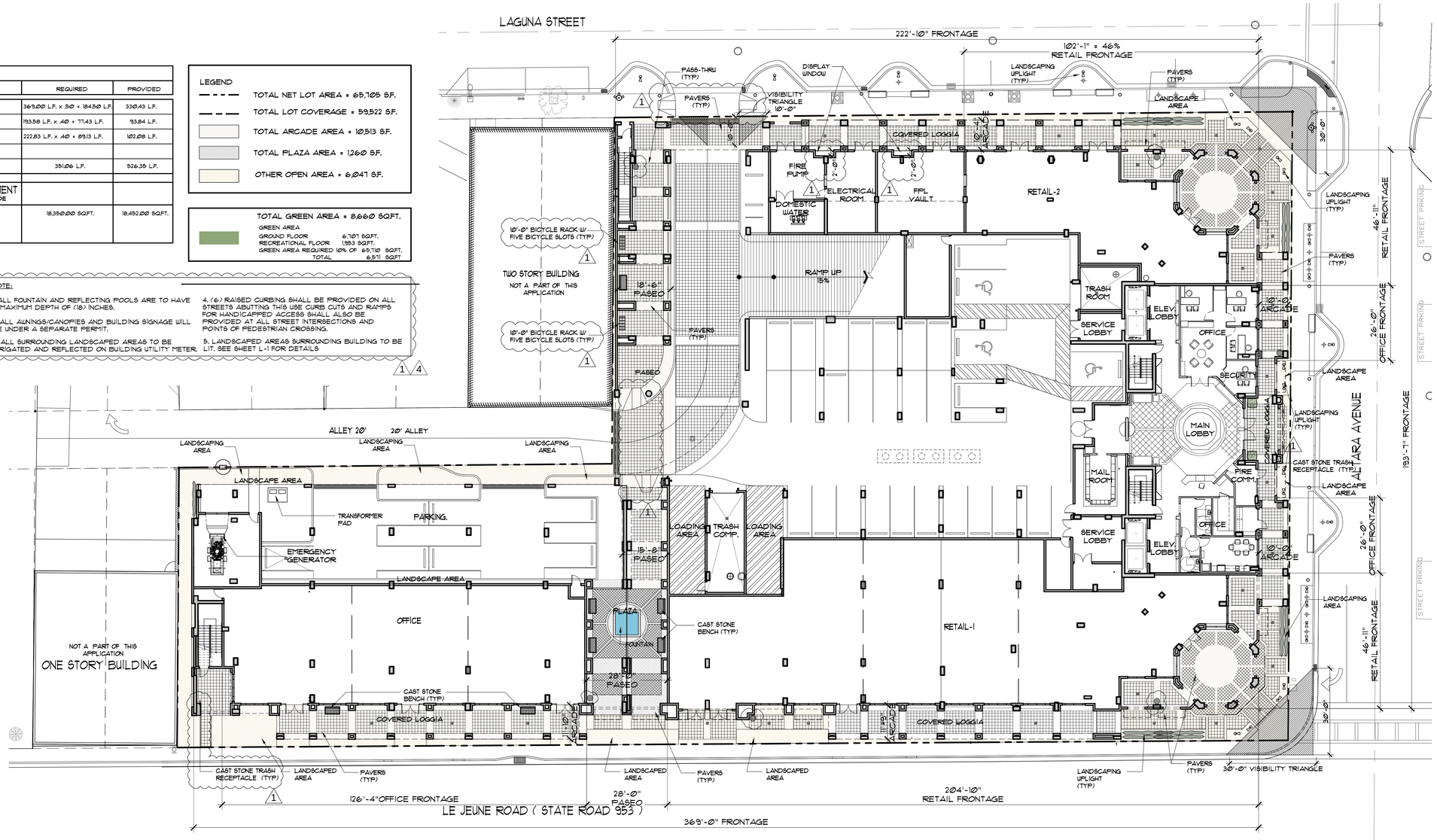

MEDITERRANEAN STYLE DESIGN

(REQUIRED STANDARDS) TABLE 1 (ALL REQUIRED)

REF	TYPE	PROVIDED	NOT PROVIDED	COMMENTS
1	ARCHITECTURAL ELEMENTS ON BUILDING FACADES	YES		SEE ELEVATIONS SHEETS A-2.0 & A-2.1
2	ARCHITECTURAL RELIEF ELEMENTS AT STREET LEVEL	YES		SEE FLOOR PLAN SHEET A-1.0 & ELEVATIONS SHEETS A-2.0 & A-2.1 DISPLAY WINDOWS, ARCADE AND LANDSCAPING PROVIDED.
3	ARCHITECTURAL ELEMENTS ON THE TOP OF BLDG.	YES		SEE ELEVATIONS SHEETS A-2.0 & A-2.1 (TOWER ELEVATIONS W/METAL ROOF, TRELLISES, ETC.)
4	BICYCLE STORAGE	YES		SEE FLOOR PLAN A-1.0 & THIS SHEET A-0.2
5	BUILDING FACADES	YES		SEE ELEVATIONS SHEETS A-2.0 & A-2.1 (VERTICAL BREAKS PROVIDED AT REGULAR INTERVALS)
6	BUILDING LOT COVERAGE	YES		SEE LEGEND THIS SHEET A-0.2
7	DRIVE THRU FACILITIES	N/A		
8	LANDSCAPE / OPEN SPACE AREA	YES		SEE SHEET L-1 (TABLE)
9	STREET LIGHTING	YES		STREET LIGHTS EXISTS (SEE NOTATIONS THIS SHEET)
10	PARKING GARAGES	YES		SEE THIS SHEET, A-1.1, A-2.0 & A-2.1 (GROUND FLOOR PARKING AT ALLEY ONLY)
11	PORTE-COCHERES	N/A		
12	SIDEWALK / PEDESTRIAN ACCESS	YES		SEE THIS SHEET, A-1.1 & L-1.0 FOR STREETSCAPE PLAN (** SEE NOTE BELOW)
13	RIGHT-OF-WAY PLANTING REQUIREMENTS	YES		SEE SHEET A-1.1 & L-1.0 FOR STREETSCAPE PLAN (SUBJECT TO PS/PW REVIEW/APPROVAL. SEE ST-1 STREETSCAPE DETAILS
14	STRUCTURAL SOIL	YES		SEE NOTE 3 AND LANDSCAPE PLAN
15	WINDOWS ON MEDITERRANEAN BUILDINGS	YES		SEE ELEVATIONS SHEETS A-2.0 & A-2.1 & NOTE No. 4 THIS SHEET

** THIS SHEET DEPICTS ;
1- CONTINUOUS SIDEWALKS AT LEJEUNE ROAD, GRANELLO AVENUE & PONCE DE LEON BLVD.
2- CONTINUOUS PAVED ARCADES
3- PEDESTRIAN ENTRIES FROM PONCE DE LEON BLVD. GRANELLO AVENUE & LEJEUNE ROAD.

MEDITERRANEAN STYLE DESIGN

(ARCHITECTURAL AND PUBLIC REALM STANDARDS) TABLE 2 (SIX OF TWELVE REQUIRED)

REF	TYPE	PROVIDED	NOT PROVIDED	COMMENTS
1	ARCADES AND OR / LOGGIAS	YES		SEE PLAN THIS SHEET & A-1.1 FOR ARCADE PROVIDED ALONG LE JEUNE ROAD, ALTARA AVENUE & LAGUNA STREET
2	BUILDING ROOF LINES	YES		SEE ELEVATIONS
3	BUILDING STEPBACK	YES		SEE SHEET FLOOR PLANS & ELEVATIONS
4	BUILDING TOWERS	YES		SEE ELEVATIONS
5	DRIVEWAYS	YES		SEE PLAN THIS SHEET (PARKING GARAGE DRIVEWAY ENTRY FROM LAGUNA STREET
6	LIGHTING OF LANDSCAPING	YES		SEE UPLIGHTING AT LEJEUNE PLAZA AREA
7	MATERIALS ON EXTERIOR BUILDING FACADES	YES		PAINTED STUCCO, W/KEYSTONE VENEER AND IMITATION KEYSTONE ACCENTS AT PEDESTRIAN ENTRIES, AND LEJEUNE PLAZA, BARREL ROOF TILE AT TOWERS
8	OVERHEAD DOORS	YES		NOTE THAT NONE OF THE PARKING ENTRIES THAT MAY RECEIVE OVERHEAD DOORS, FACE A RESIDENTIAL PROPERTY (LAGUNA STREET)
9	PAVER TREATMENT	YES		PAVERS ARE SHOWN THROUGHOUT THE GROUND FLOOR SEE THIS SHEET
10	PEDESTRIAN AMENITIES	YES		SEE THIS SHEET (BENCHES, EXPANDED SIDEWALKS, REFUSE CONTAINER, WATER FEATURE)
11	PEDESTRIAN PASS-THROUGHS / PASEOS	YES		SEE PASEOS THIS SHEET
12	UNDERGROUND PARKING	N/A		

NOTES:

1. ALL STREETSCAPE IMPROVEMENTS LOCATED WITHIN R.O.W. (CURBS, PARALLEL PARKING, PLANTERS, ETC.) SHALL BE SUBJECT TO CITY OF CORAL GABLES PUBLIC WORKS AND PUBLIC SERVICE APPROVAL
2. PROJECT TO COMPLY WITH ALL PUBLIC WORKS AND PUBLIC SERVICE R.O.W. PLANTING REQUIREMENTS OR A PAYMENT MAY BE MADE TO THE APPLICABLE IMPROVEMENTS FUND PER SECTION 5-1105 (A) (2) - (4).
3. STREETSCAPE AND ALLEY PLANTING TO BE INSTALLED PER PUBLIC WORKS / PUBLIC SERVICE STANDARDS.
4. MIN. WINDOW CASING DEPTH TO BE 4" MEASURED FROM FACE OF BUILDING

MEDITERRANEAN STYLE DESIGN	PROVIDED	NOT PROVIDED	COMMENTS
(OTHER DEVELOPMENT OPTIONS) TABLE 3			
REF TYPE			
1 BUILDING SET BACKS	N/A		
2 R.O.W. ENCROACHMENTS	N/A		
3 PARKING EXCEPTIONS	N/A		
4 MULTY-FAMILY DENSITY	N/A		

MED. BONUS FLOOR PLAN
NTS

ARCHITECTURE
PLANNING
INTERIORS
Certification No. AA0002451

4533 PONCE DE LEON BLVD.
Coral Gables, Florida 33146
TEL: (305) 740-5442
FAX: (305) 740-5443
E-MAIL: info@beharfont.com

© 2011 BEHAR FONT & PARTNERS P.A.
THE DESIGN AND DRAWINGS FOR THE PROJECT ARE THE PROPERTY OF THIS ARCHITECT AND ARE PROTECTED UNDER THE COPYRIGHT PROTECTION ACT.

SEAL :

Javier Font AR No. 12547

CONSULTANT :

CLIENT :

BEHAR · FONT & PARTNERS P.A.

PROPOSED MIXED-USE BUILDING
MERRICK MANOR
4133 LE JEUNE ROAD
CORAL GABLES, FLORIDA

OWNER :

DATE:
04-27-2012

REVISIONS:
1 01/31/12 ZONNING DEPT.

PROJECT No.
11-011

DRAWN BY:
-

CHECKED BY:
JF

SCALE:
AS SHOWN

SHEET No.
A-0.2
OF

ARCADE TABULATION

STREET	ALLOWED	PROVIDED
LEJEUNE ROAD		234.00 L.F.
ALTARA AVENUE		149.41 L.F.
LAGUNA STREET		194.25 L.F.
LINEAR LENGTH OF THE BUILDING	785 x 80% = MAXIMUM 628 L.F.	
TOTAL	628 L.F.	577.66 L.F.

REDUCTION IN SETBACKS	REQUIRED	PROVIDED PLAZA, LANDSCAPE, ARCADE AREA OTHER OPEN AREAS
TOTAL ENCROACHMENT SETBACK AREA = 5,883 SQFT.X 50%= 2,941 SQFT.	2,941 SQF.T	24,415 SQF.T

ENCROCHMENT OPENSPACE

STREET	ENCROCHMENT AREA	REQUIRED OPENSPACE = 50%	PROVIDED
LEJEUNE ROAD	1,723 SQFT.	862 SQFT.	1,622 SQFT.
ALTARA AVENUE	1,814 SQFT.	907 SQFT.	1,362 SQFT.
LAGUNA STREET	2,346 SQFT.	1,173 SQFT.	1,735 SQFT.

1

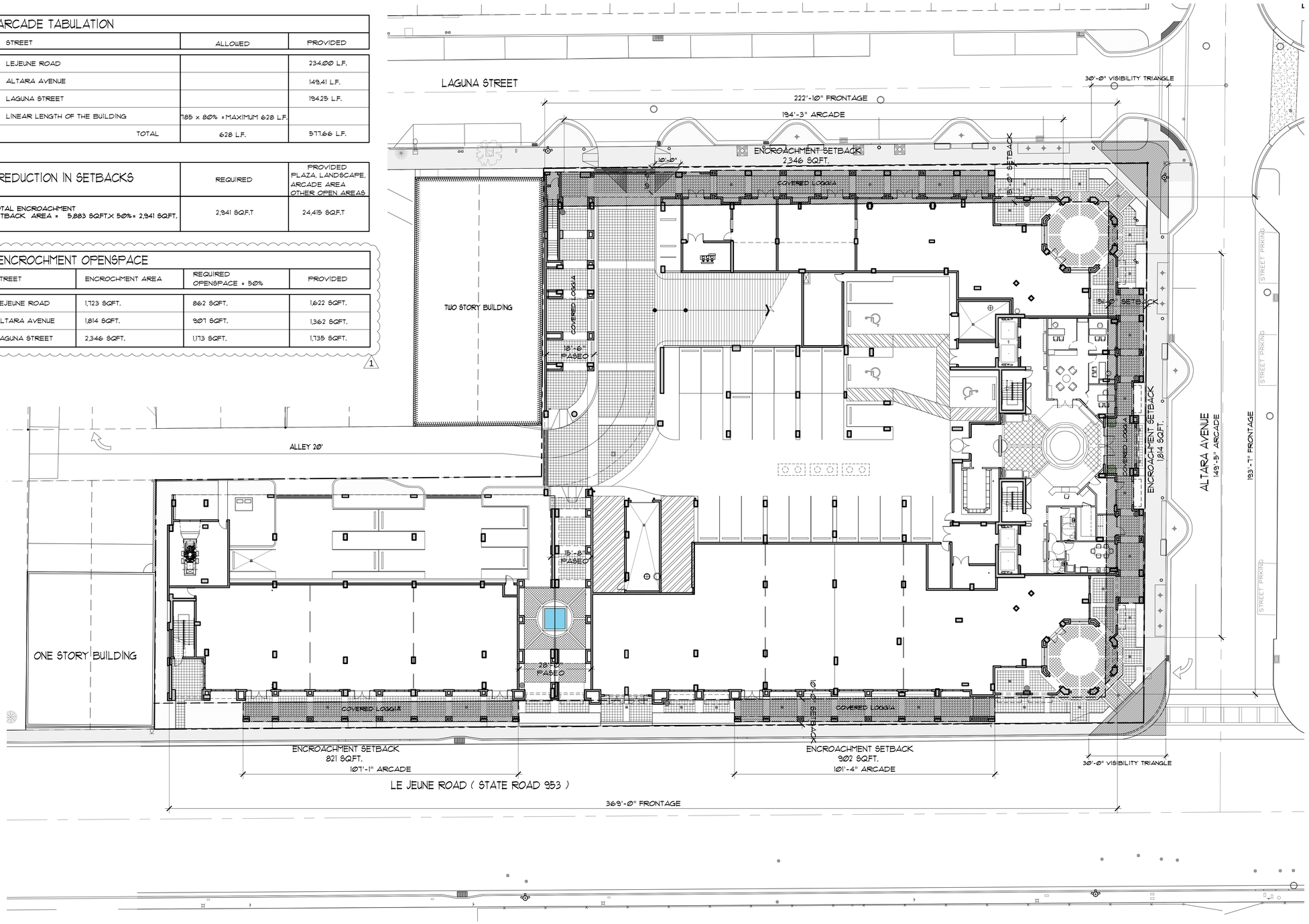

SETBACK REDUCTION
NTS

ARCHITECTURE
PLANNING
INTERIORS
Certification No. AA0002451

4533 PONCE DE LEON BLVD
Coral Gables, Florida 33146
TEL: (305) 740-5442
FAX: (305) 740-5443
E-MAIL: info@beharfont.com

© 2011 BEHAR FONT & PARTNERS P.A.
THE DESIGN AND DRAWINGS FOR THIS PROJECT ARE THE PROPERTY OF THIS ARCHITECT AND ARE PROTECTED UNDER THE COPYRIGHT PROTECTION ACT.

SEAL :

Javier Font AR No. 12547

CONSULTANT :

CLIENT:

BEHAR · FONT & PARTNERS P.A.

PROPOSED MIXED-USE BUILDING
MERRICK MANOR
4133 LE JEUNE ROAD
CORAL GABLES, FLORIDA

OWNER :

DATE:
04-27-2012

REVISIONS:
1 04/02/12
ZONNING DEPT.

PROJECT No.
11-011

DRAWN BY:
-

CHECKED BY:
JF

SCALE:
AS SHOWN

SHEET No.
A-0.2.1
OF

ENCROACHMENTS

STREET	TYPOLOGY
LEJEUNE ROAD	NONE
ALTARA AVENUE	LANDSCAPING (SOFTSCAPE) BENCHES LIGHT POLE FIXTURE FIRE HYDRANT
LAGUNA STREET	LANDSCAPING (SOFTSCAPE) BENCHES TREE GRATES PEDETRIAN AMENITIES FIRE HYDRANT LIGHT POLE FIXTURES

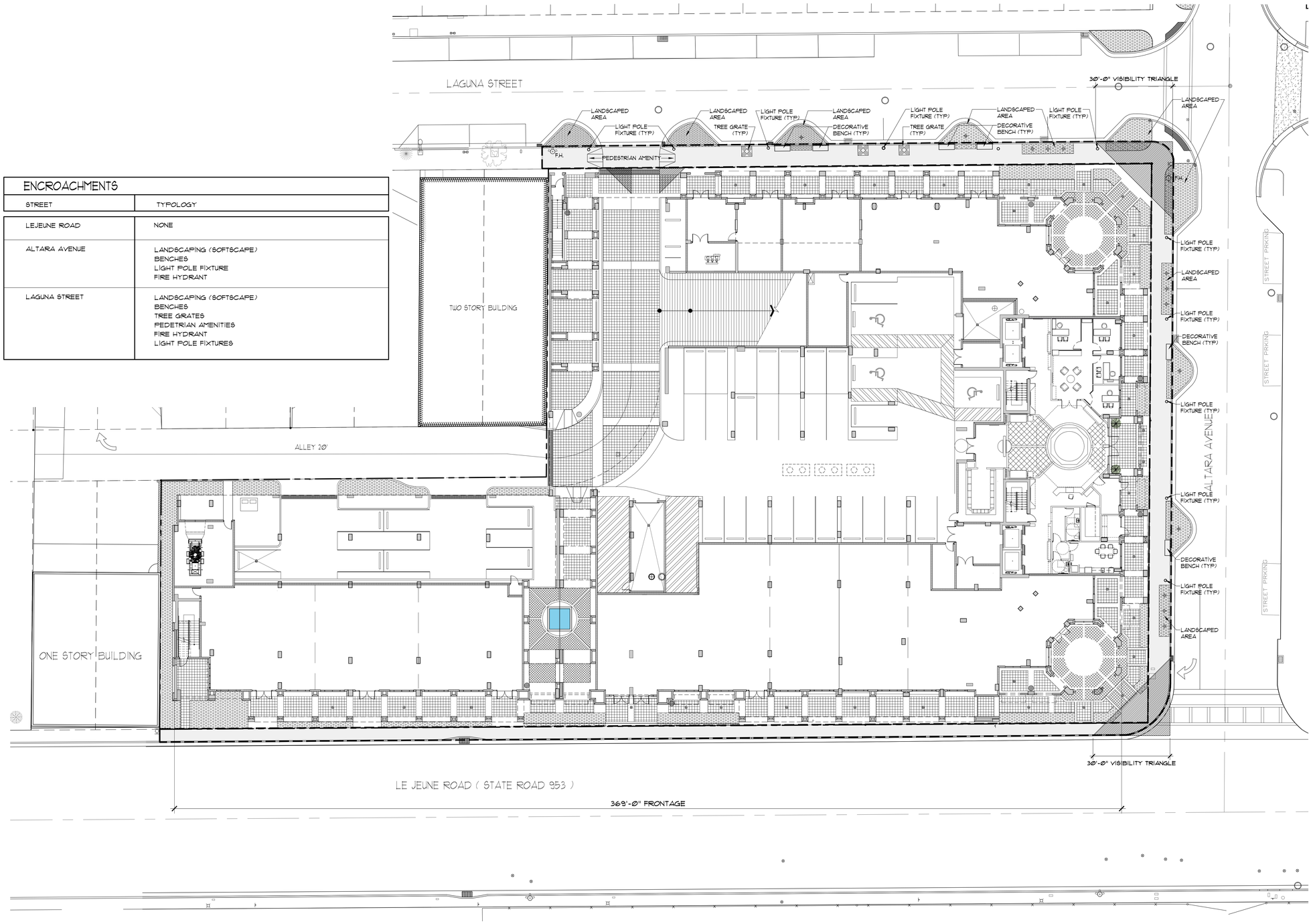

ENCROACHMENT PLAN
NTS

ARCHITECTURE
PLANNING
INTERIORS

Certification No. AA0002451

4533 PONCE DE LEON BLVD
Coral Gables, Florida 33146
TEL: (305) 740-5442
FAX: (305) 740-5443
E-MAIL: info@beharfont.com

© 2011 BEHAR FONT & PARTNERS P.A.
THE DESIGN AND DRAWINGS FOR THIS PROJECT ARE THE PROPERTY OF THIS ARCHITECT AND ARE PROTECTED UNDER THE COPYRIGHT PROTECTION ACT.

SEAL :

Javier Font AR No. 12547

CONSULTANT :

CLIENT:

BEHAR · FONT & PARTNERS P.A.

PROPOSED MIXED-USE BUILDING
MERRICK MANOR
4133 LE JEUNE ROAD
CORAL GABLES, FLORIDA

OWNER :

DATE:
04-27-2012

REVISIONS:

PROJECT No.
11-011

DRAWN BY:
-

CHECKED BY:
JF

SCALE:
AS SHOWN

SHEET No.
A-0.2.2
OF

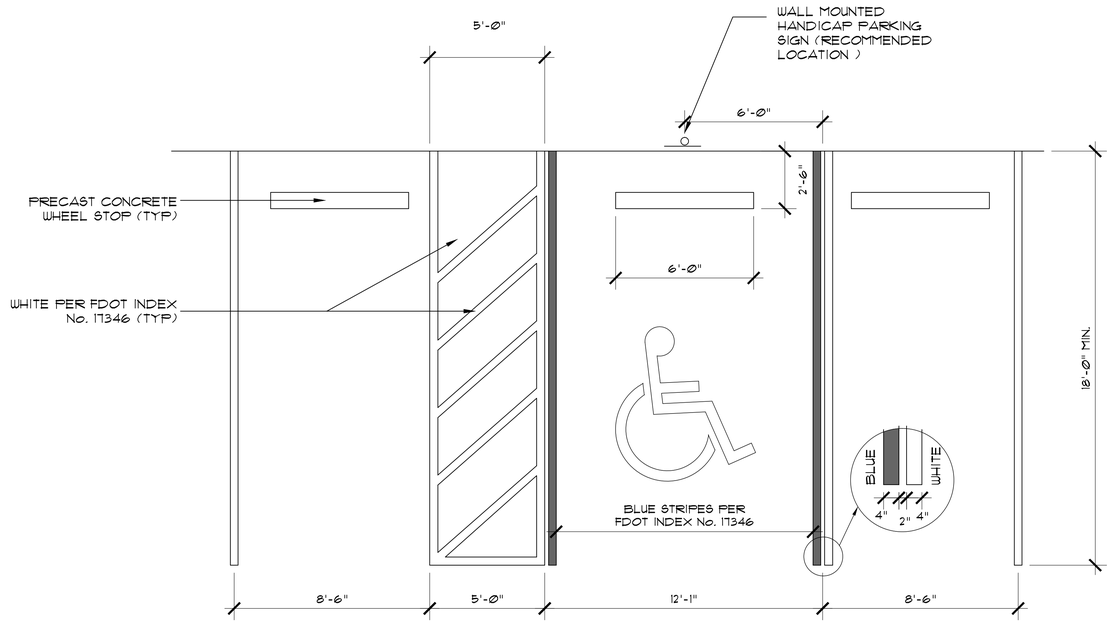

1 TYPICAL HANDICAP PARKING DETAIL
SCALE: 3/8" = 1'-0"

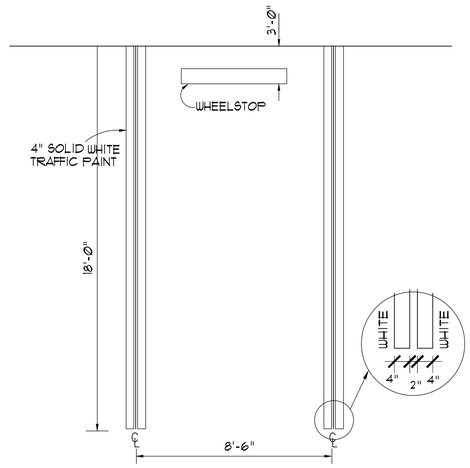

2 TYPICAL PARKING DETAIL
SCALE: 3/8" = 1'-0"

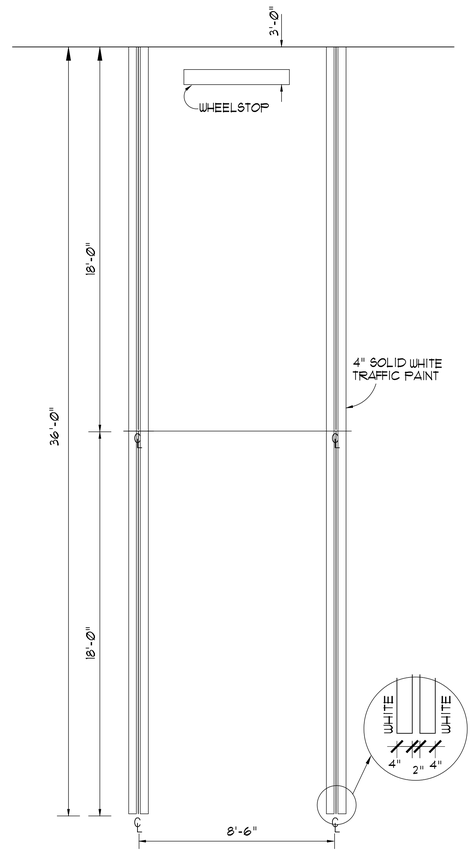

4 TYPICAL TANDEM PARKING DETAIL
SCALE: 3/8" = 1'-0"

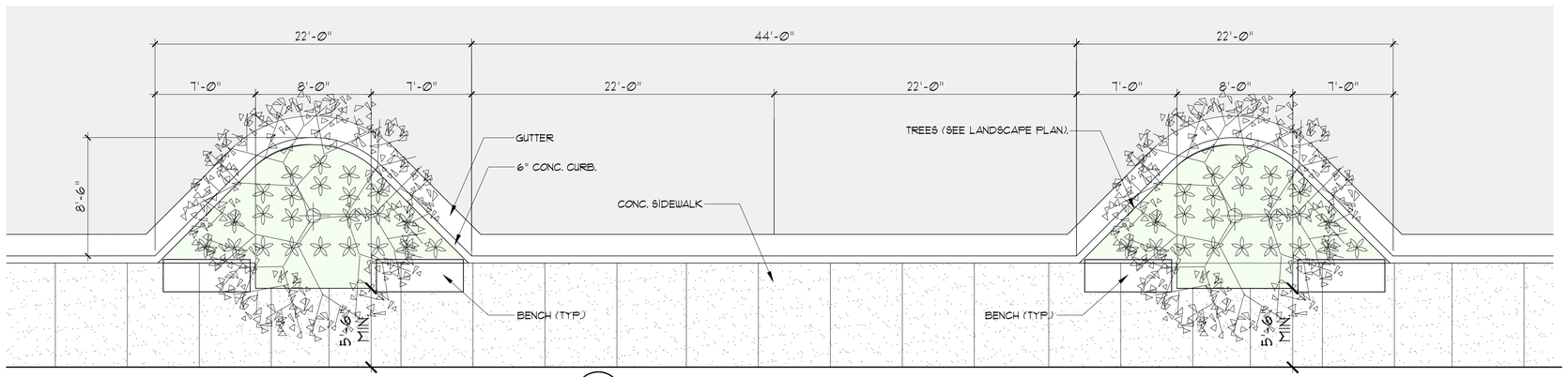

3 TYPICAL PARALLEL PARKING DETAIL
SCALE: 1/4" = 1'-0"

PARKING DETAILS

BEHAR · FONT & PARTNERS P.A.
ARCHITECTURE
PLANNING
INTERIORS
Certification No. AA0002451
4533 PONCE DE LEON BLVD
Coral Gables, Florida 33146
TEL: (305) 740-5442
FAX: (305) 740-5443
E-MAIL: info@beharfont.com

© 2011 BEHAR FONT & PARTNERS P.A.
THE DESIGN AND DRAWINGS FOR THIS PROJECT ARE THE PROPERTY OF THIS ARCHITECT AND ARE PROTECTED UNDER THE COPYRIGHT PROTECTION ACT.

SEAL :

Javier Font AR No. 12547

CONSULTANT :

CLIENT:

PROPOSED MIXED-USE BUILDING
MERRICK MANOR
4133 LE JEUNE ROAD
CORAL GABLES, FLORIDA

OWNER :

DATE:
04-27-2012

REVISIONS:
1 09/31/12 ZONING DEPT.

PROJECT No.
11-011

DRAWN BY:
-

CHECKED BY:
JF

SCALE:
AS SHOWN

SHEET No.
A-0.4 1
OF

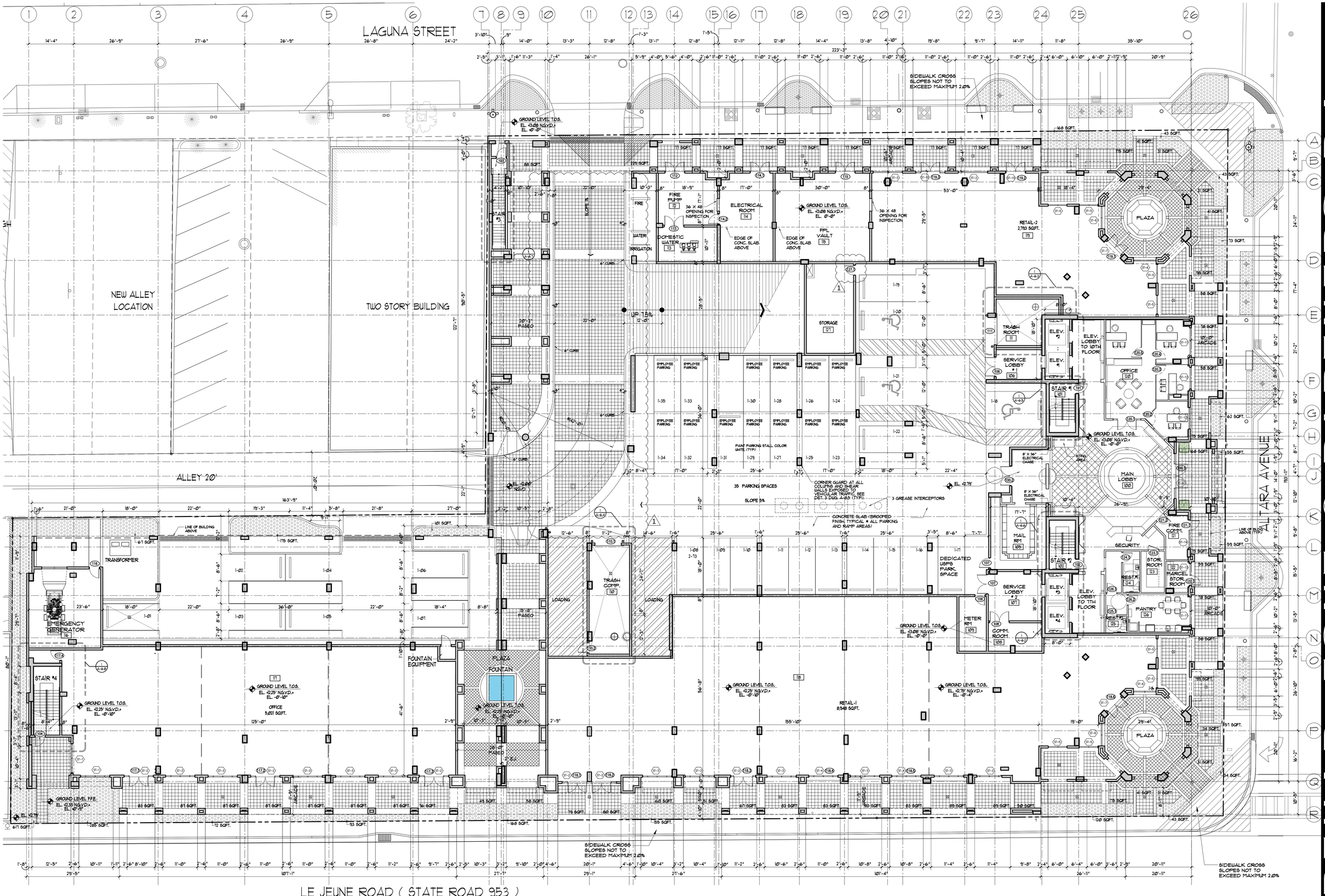

NOTE:

1. ALL FOUNTAIN AND REFLECTING POOLS ARE TO HAVE A MAXIMUM DEPTH OF (18) INCHES.
2. ALL AWNINGS/CANOPIES AND BUILDING SIGNAGE WILL BE UNDER A SEPARATE PERMIT.
3. ALL SURROUNDING LANDSCAPED AREAS TO BE IRRIGATED AND REFLECTED ON BUILDING UTILITY METER.
4. (6") RAISED CURBING SHALL BE PROVIDED ON ALL STREETS ABUTTING THIS USE CURB CUTS AND RAMPS FOR HANDICAPPED ACCESS SHALL ALSO BE PROVIDED AT ALL STREET INTERSECTIONS AND POINTS OF PEDESTRIAN CROSSING.
5. LANDSCAPED AREAS SURROUNDING BUILDING TO BE LIT. SEE SHEET A-0.2 FOR REFERENCE

1 4

GROUND FLOOR PLAN

SCALE: 3/32" = 1'-0"

ARCHITECTURE
PLANNING
INTERIORS
Certification No. AA0002451

4533 PONCE DE LEON BLVD
Coral Gables, Florida 33146
TEL: (305) 740-5442
FAX: (305) 740-5443
E-MAIL: info@beharfont.com

© 2011 BEHAR FONT & PARTNERS P.A.
THE DESIGN AND DRAWINGS FOR THIS PROJECT ARE THE PROPERTY OF THIS ARCHITECT AND ARE PROTECTED UNDER THE COPYRIGHT PROTECTION ACT.

SEAL:

Javier Font AR No. 12547

CONSULTANT:

CLIENT:

BEHAR · FONT & PARTNERS, P.A.

PROPOSED MIXED-USE BUILDING
MERRICK MANOR
4133 LE JEUNE ROAD
CORAL GABLES, FLORIDA

OWNER:

DATE: 04-27-2012

REVISIONS:
1 01/31/12 ZONNING DEPT.

PROJECT No. 11-011

DRAWN BY: -

CHECKED BY: JF

SCALE: AS SHOWN

SHEET No. A-1.0

OF

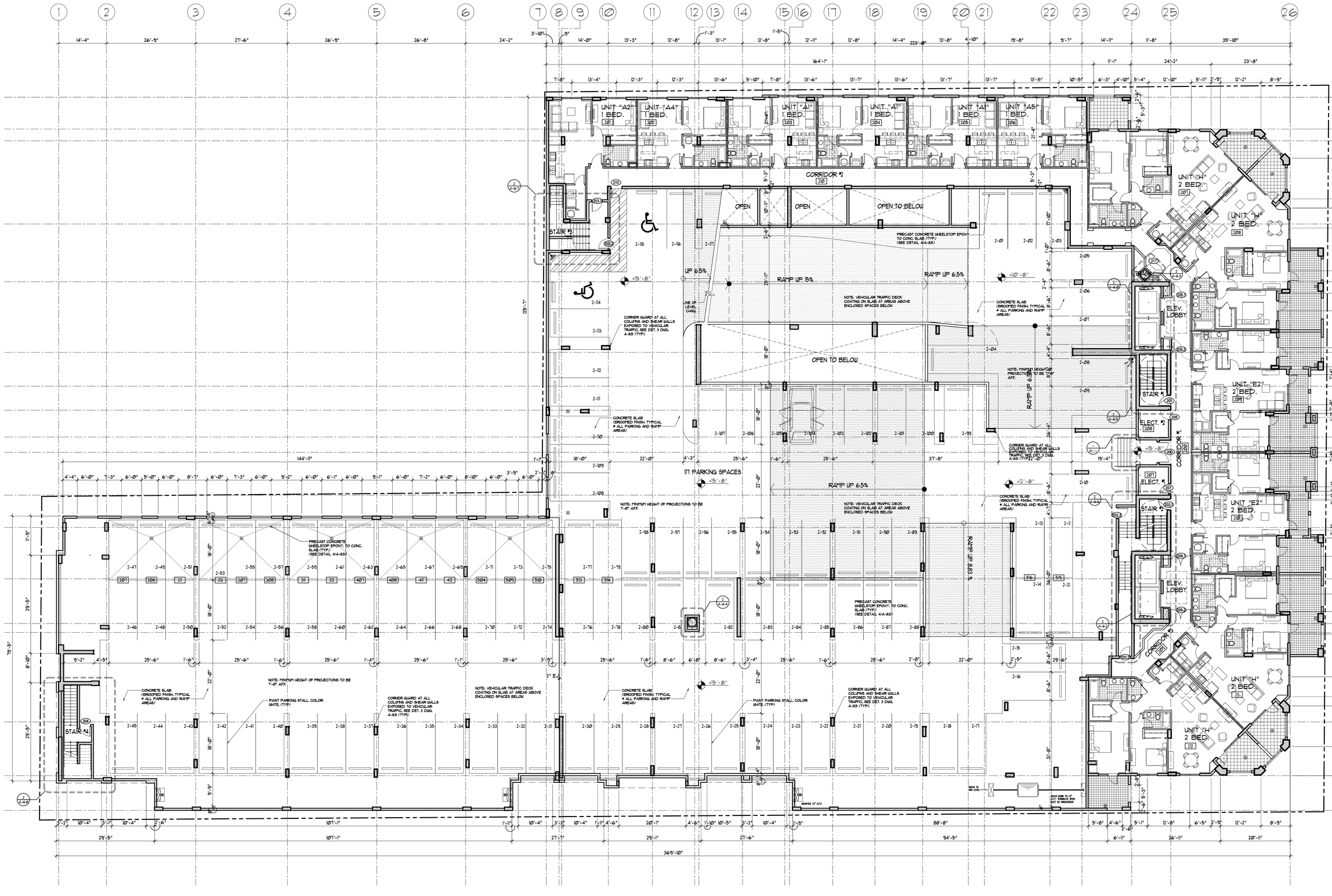

SECOND LEVEL FLOOR PLAN

SCALE: 3/32" = 1'-0"

ARCHITECTURE
PLANNING
INTERIORS

Certification No. AA0002451

4533 PONCE DE LEON BLVD
Coral Gables, Florida 33146
TEL: (305) 740-5442
FAX: (305) 740-5443
E-MAIL: info@beharfont.com

© 2011 BEHAR FONT & PARTNERS P.A.
THE DESIGN AND DRAWINGS FOR THIS PROJECT ARE THE PROPERTY OF THIS ARCHITECT AND ARE PROTECTED UNDER THE COPYRIGHT PROTECTION ACT.

SEAL :

Javier Font AR No. 12547

CONSULTANT :

CLIENT :

OWNER :

DATE:
04-27-2012

REVISIONS:

PROJECT No.
11-011

DRAWN BY:
-

CHECKED BY:
JF

SCALE:
AS SHOWN

SHEET No.
A-1.1
OF

BEHAR · FONT & PARTNERS P.A.

PROPOSED MIXED-USE BUILDING
MERRICK MANOR
4133 LE JEUNE ROAD
CORAL GABLES, FLORIDA

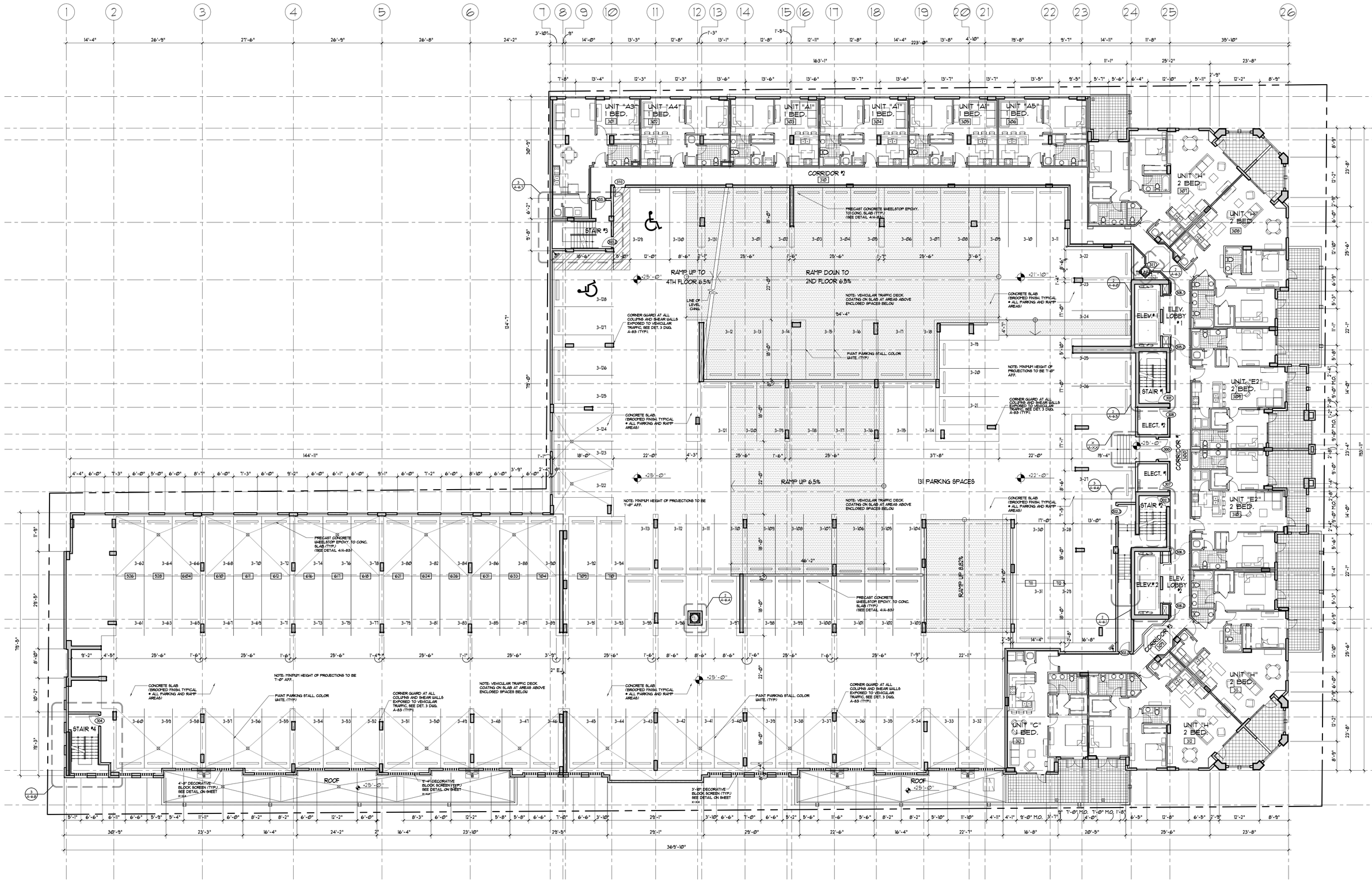

THIRD LEVEL FLOOR PLAN

SCALE: 3/32" = 1'-0"

ARCHITECTURE
PLANNING
INTERIORS

Certification No. AA0002451

4533 PONCE DE LEON BLVD
Coral Gables, Florida 33146
TEL: (305) 740-5442
FAX: (305) 740-5443
E-MAIL: info@beharfont.com

© 2011 BEHAR FONT & PARTNERS P.A.
THE DESIGN AND DRAWINGS FOR THIS PROJECT ARE THE PROPERTY OF THIS ARCHITECT AND ARE PROTECTED UNDER THE COPYRIGHT PROTECTION ACT.

SEAL :

Javier Font AR No. 12547

CONSULTANT :

CLIENT:

OWNER :

DATE:
03-12-2012

REVISIONS:

PROJECT No.
11-011

DRAWN BY:
-

CHECKED BY:
JF

SCALE:
AS SHOWN

SHEET No.
A-1.2
OF

BEHAR · FONT & PARTNERS P.A.

PROPOSED MIXED-USE BUILDING
MERRICK MANOR
4133 LE JEUNE ROAD
CORAL GABLES, FLORIDA

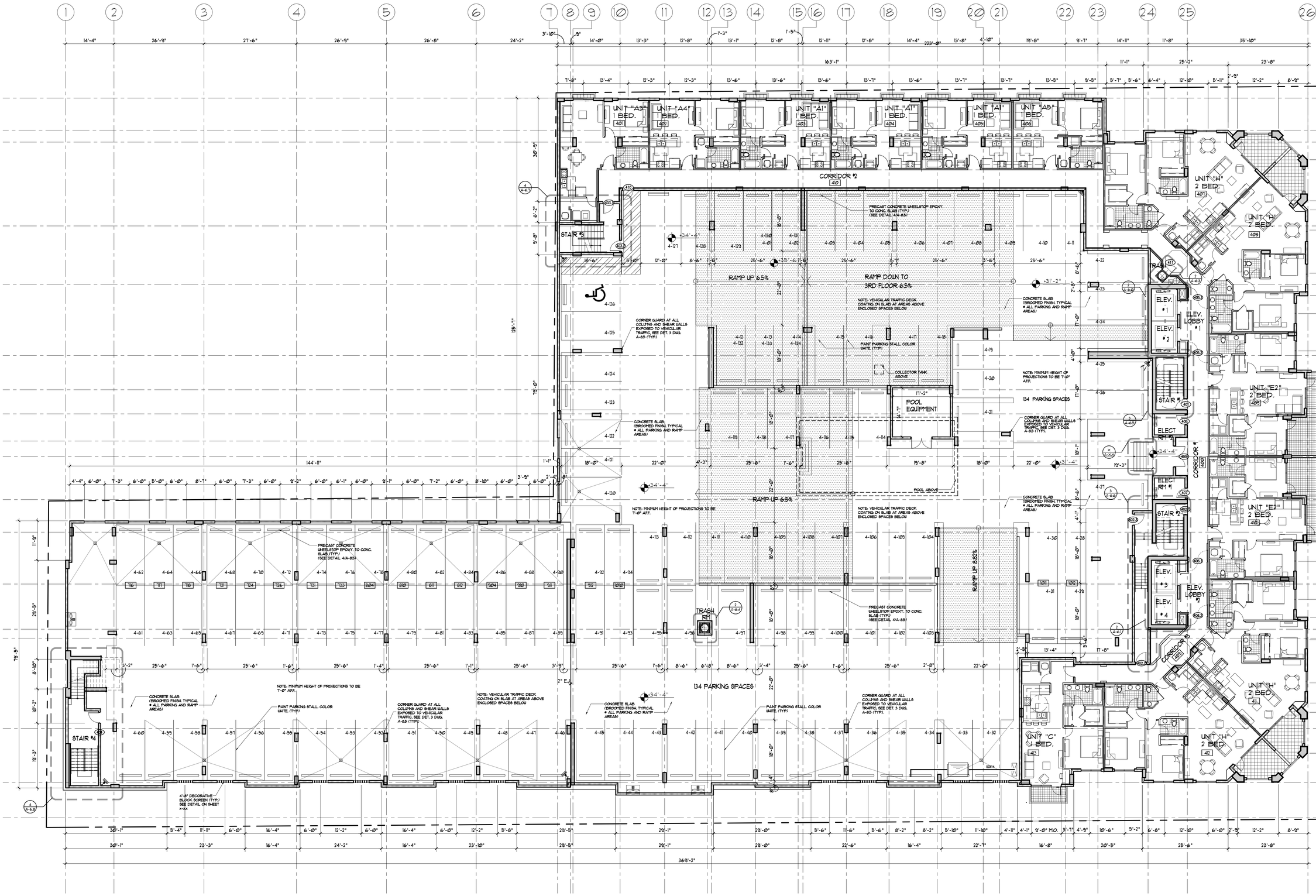

FOURTH LEVEL FLOOR PLAN

SCALE: 3/32" = 1'-0"

ARCHITECTURE
PLANNING
INTERIORS

Certification No. AA0002451

4533 PONCE DE LEON BLVD
Coral Gables, Florida 33146
TEL: (305) 740-5442
FAX: (305) 740-5443
E-MAIL: info@beharfont.com

© 2011 BEHAR FONT & PARTNERS P.A.
THE DESIGN AND DRAWINGS FOR THIS PROJECT ARE THE PROPERTY OF THIS ARCHITECT AND ARE PROTECTED UNDER THE COPYRIGHT PROTECTION ACT.

SEAL :

Javier Font AR No. 12547

CONSULTANT :

CLIENT:

BEHAR · FONT & PARTNERS, P.A.

PROPOSED MIXED-USE BUILDING
MERRICK MANOR
4133 LE JEUNE ROAD
CORAL GABLES, FLORIDA

OWNER :

DATE:
03-12-2012

REVISIONS:

PROJECT No.
11-011

DRAWN BY:
-

CHECKED BY:
JF

SCALE:
AS SHOWN

SHEET No.
A-1.3
OF

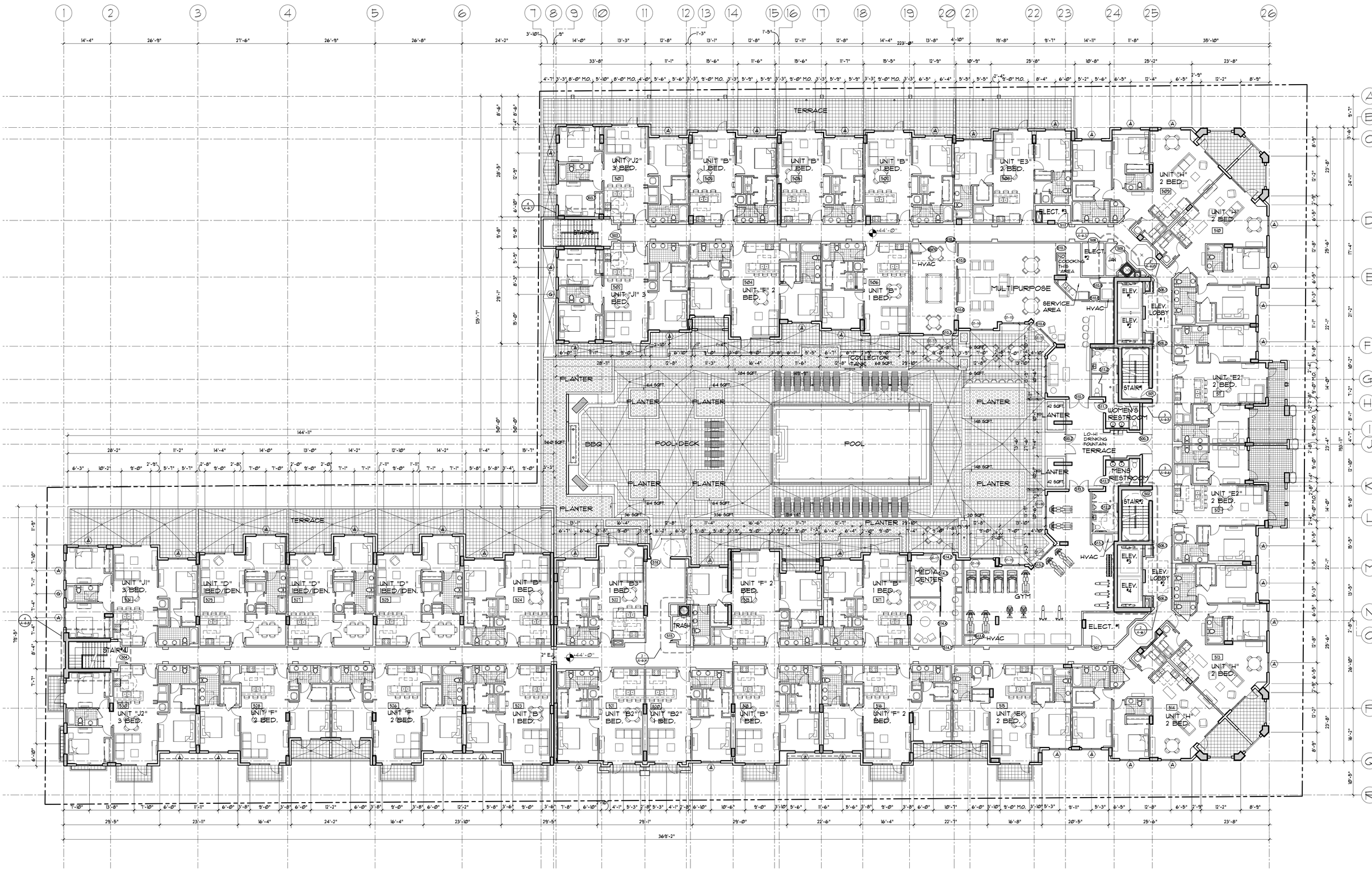

FIFTH LEVEL FLOOR PLAN

SCALE: 3/32" = 1'-0"

ARCHITECTURE
PLANNING
INTERIORS

Certification No. AA0002451

4533 PONCE DE LEON BLVD
Coral Gables, Florida 33146
TEL: (305) 740-5442
FAX: (305) 740-5443
E-MAIL: info@beharfont.com

© 2011 BEHAR FONT & PARTNERS P.A.
THE DESIGN AND DRAWINGS FOR THIS PROJECT ARE THE PROPERTY OF THIS ARCHITECT AND ARE PROTECTED UNDER THE COPYRIGHT PROTECTION ACT.

SEAL :

Javier Font AR No. 12547

CONSULTANT :

CLIENT:

OWNER :

DATE:
04-27-2012

REVISIONS:

PROJECT No.
11-011

DRAWN BY:
-

CHECKED BY:
JF

SCALE:
AS SHOWN

SHEET No.
A-1.4
OF

BEHAR · FONT & PARTNERS P.A.

PROPOSED MIXED-USE BUILDING
MERRICK MANOR
4133 LE JEUNE ROAD
CORAL GABLES, FLORIDA

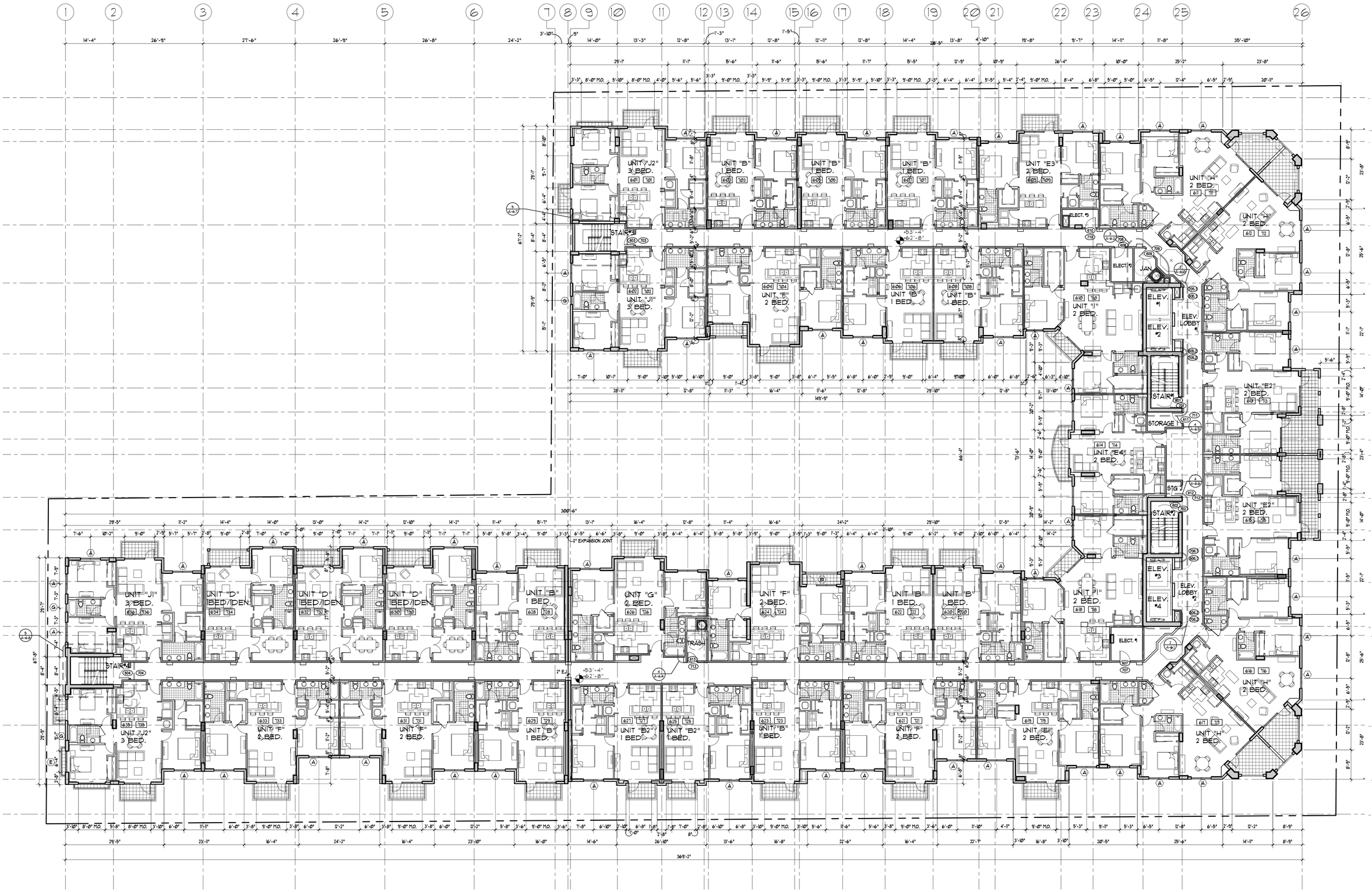

SIXTH & SEVENTH LEVEL FLOOR PLAN

SCALE: 3/32" = 1'-0"

BEHAR · FONT & PARTNERS, P.A.

ARCHITECTURE
PLANNING
INTERIORS

Certification No. AA0002451

4533 PONCE DE LEON BLVD
Coral Gables, Florida 33146
TEL: (305) 740-5442
FAX: (305) 740-5443
E-MAIL: info@beharfont.com

© 2011 BEHAR FONT & PARTNERS P.A.
THE DESIGN AND DRAWINGS FOR THIS PROJECT ARE THE PROPERTY OF THIS ARCHITECT AND ARE PROTECTED UNDER THE COPYRIGHT PROTECTION ACT.

SEAL :

Javier Font AR No. 12547

CONSULTANT :

CLIENT:

PROPOSED MIXED-USE BUILDING
MERRICK MANOR
4133 LE JEUNE ROAD
CORAL GABLES, FLORIDA

OWNER :

DATE:
04-27-2012

REVISIONS:

PROJECT No.
11-011

DRAWN BY:
-

CHECKED BY:
JF

SCALE:
AS SHOWN

SHEET No.
A-1.5

OF

GENERAL ROOFING NOTES:

1. ROOFING PLAN IS GENERAL IN NATURE AND INDICATES APPROXIMATE CONDITIONS AT THE PROJECT SITE. THE CONTRACTOR SHALL NOTIFY THE ARCHITECT OF ANY DISCREPANCIES PRIOR TO PROCEEDING WITH THE WORK. THE CONTRACTOR SHALL BE RESPONSIBLE FOR FIELD SURVEY IN REGARD TO QUANTITY, DIMENSIONS, ELEVATIONS, ROOF SLOPES CONDITIONS AND CONFORMANCE TO CODE.

2. CONTRACTOR SHALL CAREFULLY EXECUTE ALL WORK TO CARRY OUT ALL WORK REQUIRED TO MEET THE INTENT OF THE DRAWINGS.

3. ALL ROOF MOUNTED EQUIPMENT, CURBS, WOODWORK AND SHEET METAL WORK SHALL BE FASTENED SAFELY TO RESIST A MINIMUM 146 MPH WIND VELOCITY, AS SPECIFIED PER F.B.C. (2001 EDITION) UNLESS OTHERWISE NOTED.

4. CONTRACTOR SHALL PERFORM A ROOF SLOPE SURVEY TO VERIFY SLOPE CONDITIONS OF THE PROJECT PRIOR TO COMMENCEMENT OF ROOFING WORK. AN ADDITIONAL SURVEY SHALL BE CONDUCTED AFTER COMPLETION OF ROOFING WORK FOR CONFORMANCE TO THE REQUIREMENT OF THE CONTRACT DOCUMENTS.

5. CONTRACTOR TO NOTE THAT ALL ELECT. CONDUITS PLUMBING PIPES AND ROOF MOUNTED EQUIPMENT SHALL BE KEPT A MIN. OF 16" AWAY FORM HVAC CURBS AND A MIN. OF 12" AWAY FROM ADJACENT PIPING AND WALLS.

6. CRICKETS ARE REQUIRED BEHIND ALL CURB MOUNTED EQUIP. CONTRACTOR SHALL COORDINATE CURB HT TO MAINTAIN A MIN. OF 2" FLASHING HT. ROOFING MEMBRANE SYSTEM SHALL RESIST MIN. 146 MPH WIND UPLIFT ACCORDING TO BASIC WIND LOAD PRESSURES IN ANSI/ASCE 7-CHAPTER 15 & 16 , PER THE REQUIREMENT OF THE FLORIDA BUILDING CODE, 2001 EDITION.

7. CONTRACTOR TO COORDINATE WITH MECH. ELEC. AND PLUMBING AS REQUIRED.

8. CONTRACTOR TO COORDINATE WITH MECH. FOR LOCATIONS OF OPENINGS IN ROOF DECK FOR EQUIPMENT AND NOTIFY ARCHITECT PRIOR TO COMMENCING WORK OF ANY DISCREPANCIES.

REFERENCES:

1. FLORIDA BUILDING CODE, EDITION 2001 - PLUMBING AND BUILDING.

2. 5" MAX. ACCUMULATION OF RAIN WATER ON ANY PORTION OF THE ROOF PER FBC 1611.2 BUILDING, 100-YEAR, 1- HOUR RAINFALL (5" INCHES) EASTERN UNITED STATES. PER FBC FIGURE 1106.1.

3. CHAPTER 11- STORM DRAINAGE, TABLE 1106.2 SIZE OF VERTICAL CONDUCTORS AND LEADERS. FBC. 2001 EDITION.

4. SEE CHAPTER 16, FIGURE 1611.3 FOR REQUIRED AREA OF OVERFLOW SCUPPERS.

5. DRAINS OR SCUPPERS INSTALLED TO PROVIDE OVERFLOW DRAINAGE SHALL BE NOT LESS IN AGGREGATE AREA THAN AS SHOWN IN FIGURE 1611.3, BUT NO LESS THAN 4 INCHES (100mm) DIMENSION IN ANY DIRECTION AND SHALL BE PLACED IN PARAPETS NOT LESS THAN 2 INCHES (51 mm) NOR MORE THAN 4 INCHES ABOVE THE LOW POINT OF THE FINISHED ROOFING SURFACE AND SHALL BE LOCATED AS CLOSE AS PRACTICAL TO REQUIRED VERTICAL LEADERS OR DOWNSPOUTS.

SCUPPERS CALCULATIONS TABLE (Eighth level roof)

AREA	HORIZ. PROJECTED AREA (SQFT)	ADDITIONAL AREA (SQFT)	TOTAL (SQFT.)	DISTANCE RD TO SCUPPER (FT)	POND DEPTH (INCHES)	WATER HEAD (INCHES)	SCUPPER WEIR (INCHES)	SCUPPER DRAINAGE (SQFT.)
8.1	1130		1130	11.96	3.0	2.0	12	1923
8.2	1160		1160	12.79	3.2	1.8	12	1677
8.3	1200		1200	11.96	3.0	2.0	12	1923
8.4	1230		1230	14.375	3.6	1.4	16	1579
8.5	890		890	11.96	3.0	2.0	12	1923
8.6	990	180	1170	13.92	3.5	1.5	12	1308
8.7	1620	180	1800	13.45	3.4	1.6	16	1908
8.8	370	180	550	13.667	3.4	1.6	12	1431
8.9	1340		1340	11.96	3.0	2.0	12	1923
8.10	1260		1260	14.5	3.6	1.4	16	1579
8.11	1500		1500	13.54	3.4	1.6	16	1908
8.12	1180		1180	11.625	2.9	2.0	12	2077
8.13	1310		1310	13.54	3.4	1.6	12	1431
8.14	1250	210	1460	14.33	3.6	1.4	16	1579
8.15	1120	220	1340	10.2	2.5	2.5	12	2692
8.16	1016							
8.17	993							
8.18	618							
8.19	961							
8.20	1256							
8.21	645							
8.22	253							
8.23	160							

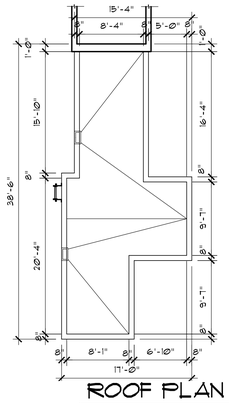

ROOF PLAN

SCALE: 1/8" = 1'-0"

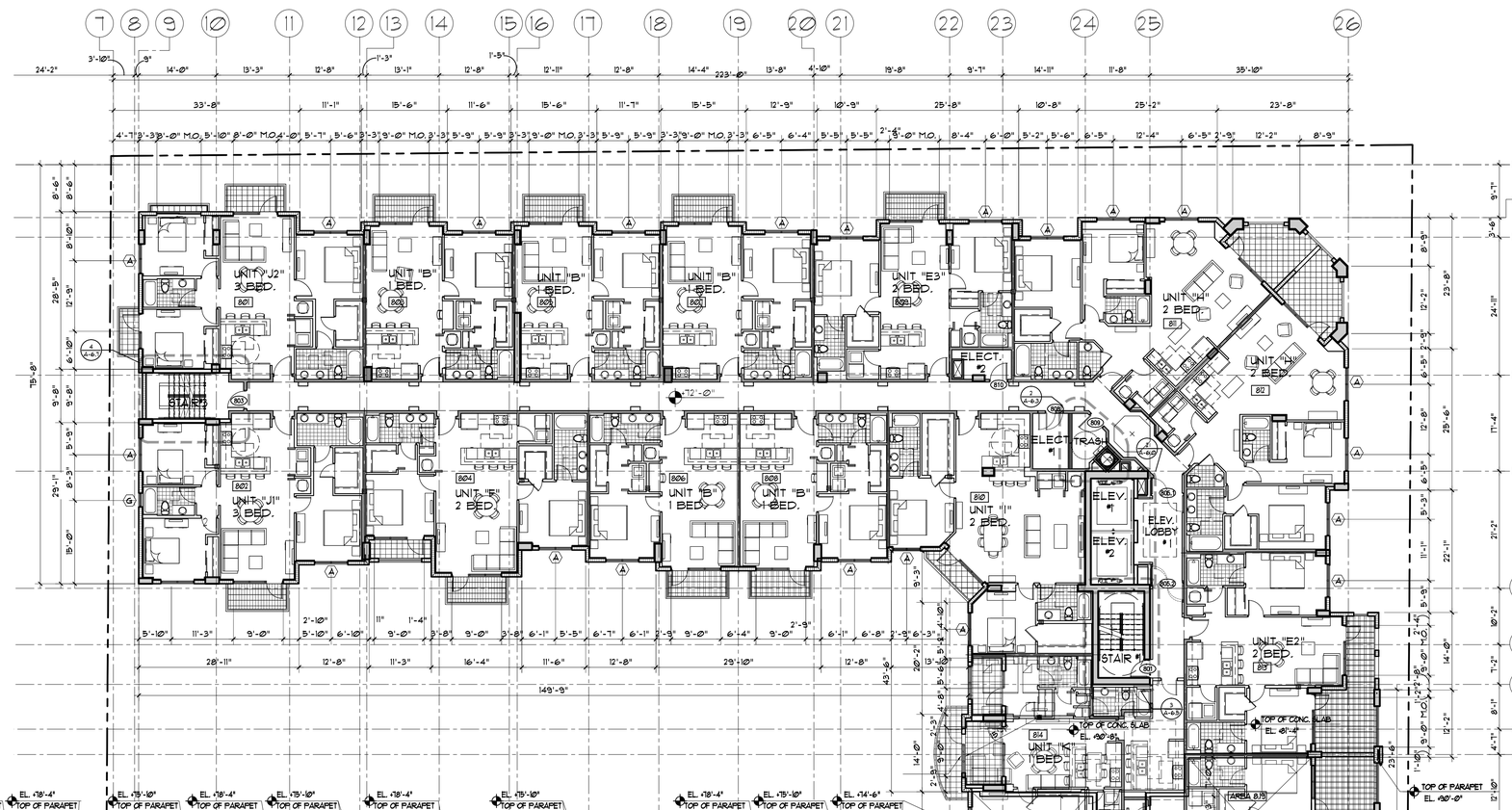

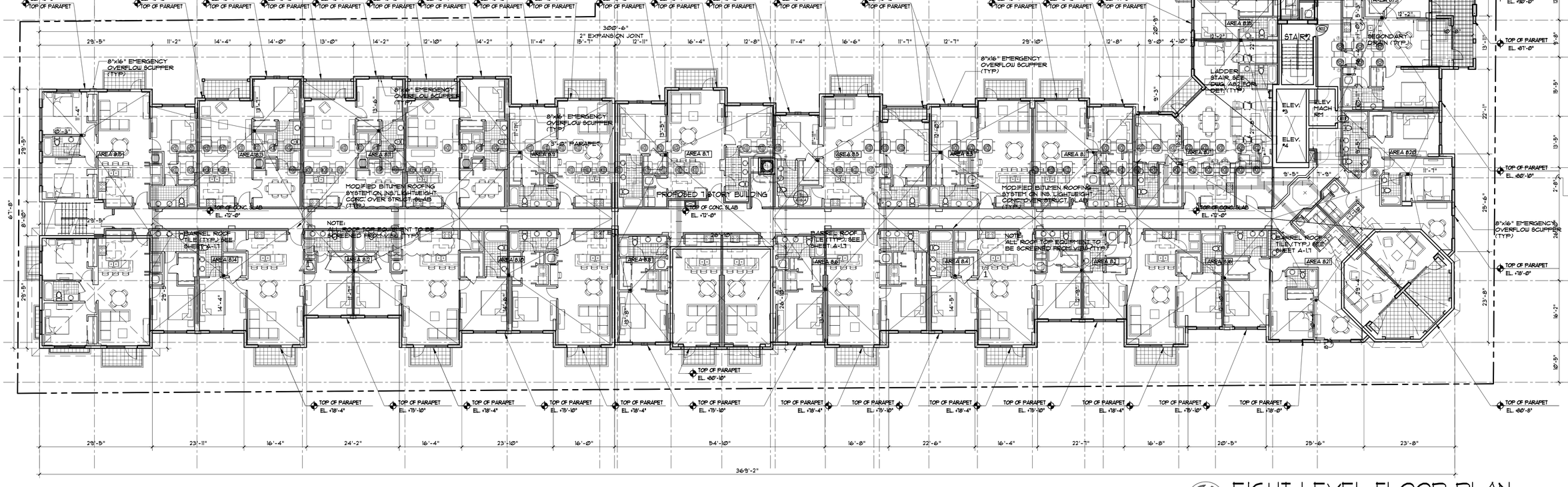

EIGHT LEVEL FLOOR PLAN

SCALE: 3/32" = 1'-0"

ARCHITECTURE
PLANNING
INTERIORS
Certification No. AA0002451

4533 PONCE DE LEON BLVD
Coral Gables, Florida 33146
TEL: (305) 740-5442
FAX: (305) 740-5443
E-MAIL: info@beharfont.com

© 2011 BEHAR FONT & PARTNERS P.A.
THE IDEAS AND DRAWINGS FOR THIS PROJECT ARE THE PROPERTY OF THIS ARCHITECT AND ARE PROTECTED UNDER THE COPYRIGHT PROTECTION ACT.

SEAL :

Javier Font AR No. 12547

CONSULTANT :

CLIENT:

BEHAR · FONT & PARTNERS, P.A.

PROPOSED MIXED-USE BUILDING
MERRICK MANOR
4133 LE JEUNE ROAD
CORAL GABLES, FLORIDA

OWNER :

DATE:

REVISIONS:
1 01/31/12 ZONNING DEPT.

PROJECT No.

DRAWN BY:

CHECKED BY:

SCALE:

SHEET No.
A-1.6
OF

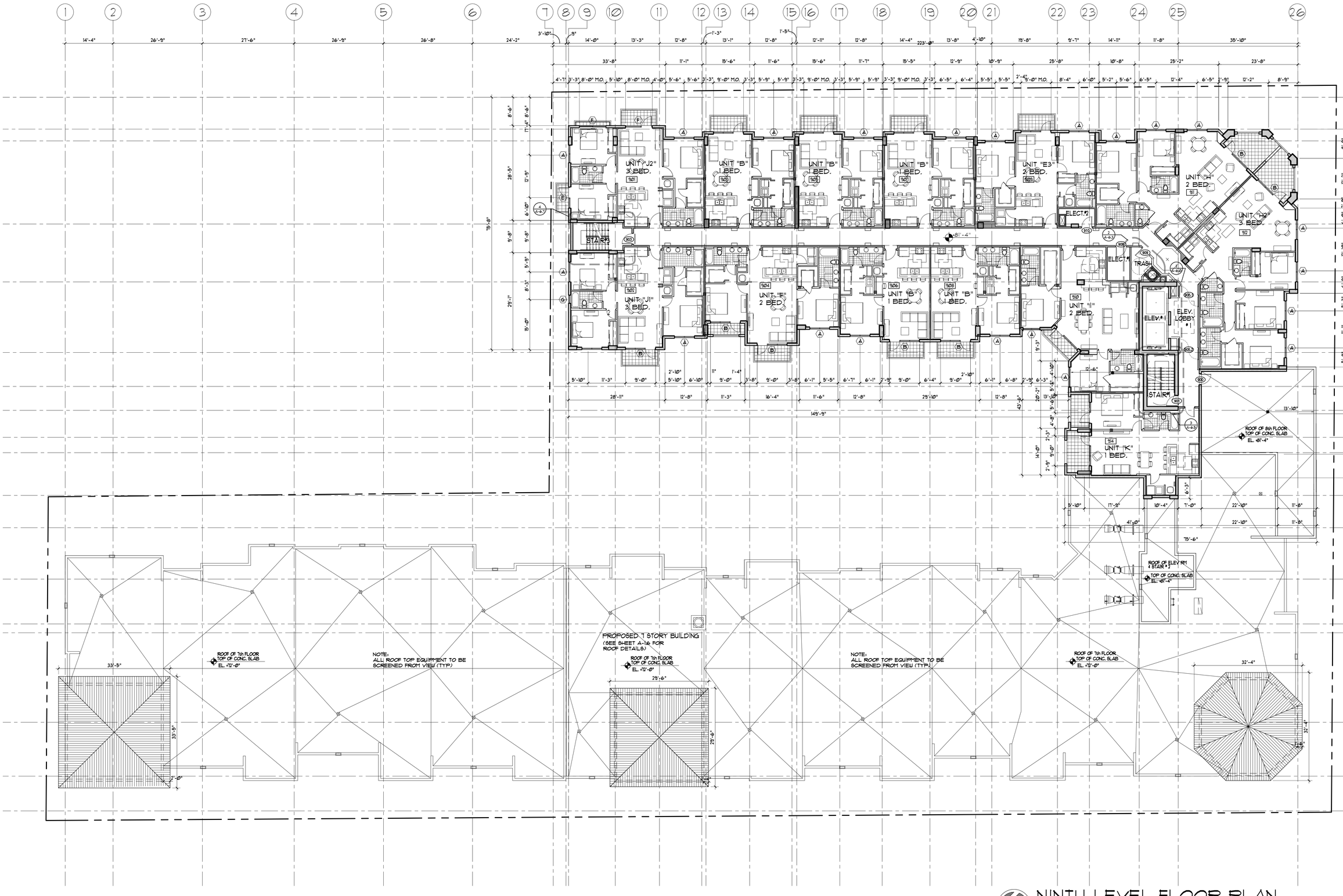

NINTH LEVEL FLOOR PLAN

SCALE: 3/32" = 1'-0"

BEHAR · FONT & PARTNERS, P.A.

ARCHITECTURE
PLANNING
INTERIORS

Certification No. AA0002451

4533 PONCE DE LEON BLVD
Coral Gables, Florida 33146
TEL: (305) 740-5442
FAX: (305) 740-5443
E-MAIL: info@behar font.com

© 2011 BEHAR FONT & PARTNERS P.A.
THE DESIGN AND DRAWINGS FOR THIS PROJECT ARE THE PROPERTY OF THIS ARCHITECT AND ARE PROTECTED UNDER THE COPYRIGHT PROTECTION ACT.

SEAL :

Javier Font AR No. 12547

CONSULTANT :

CLIENT:

PROPOSED MIXED-USE BUILDING
MERRICK MANOR
4133 LE JEUNE ROAD
CORAL GABLES, FLORIDA

OWNER :

DATE:

REVISIONS:
1 01/31/12 ZONING DEPT.

PROJECT No.

DRAWN BY:

CHECKED BY:

SCALE:

SHEET No.
A-1.7
OF

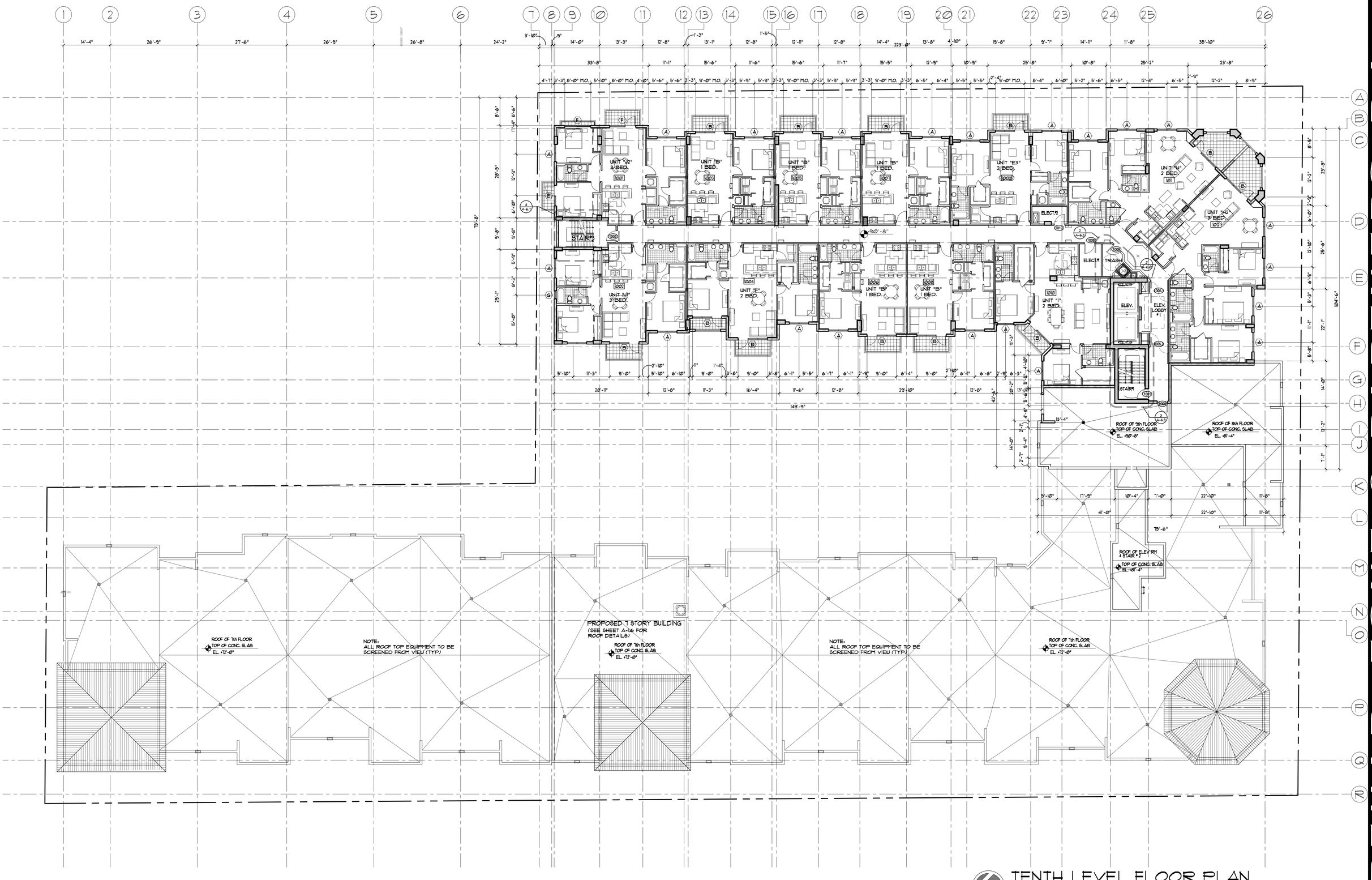

TENTH LEVEL FLOOR PLAN

SCALE: 3/32" = 1'-0"

ARCHITECTURE
PLANNING
INTERIORS

Certification No. AA0002451

4533 PONCE DE LEON BLVD
Coral Gables, Florida 33146
TEL: (305) 740-5442
FAX: (305) 740-5443
E-MAIL: info@beharfont.com

© 2011 BEHAR FONT & PARTNERS P.A.
THE DESIGN AND DRAWINGS FOR THIS PROJECT ARE THE PROPERTY OF THIS ARCHITECT AND ARE PROTECTED UNDER THE COPYRIGHT PROTECTION ACT.

SEAL :

Javier Font AR No. 12547

CONSULTANT :

CLIENT:

BEHAR · FONT & PARTNERS P.A.

PROPOSED MIXED-USE BUILDING
MERRICK MANOR
4133 LE JEUNE ROAD
CORAL GABLES, FLORIDA

OWNER :

DATE:
03-12-2012

REVISIONS:
1 01/31/12 ZONNING DEPT.

PROJECT No.
11-011

DRAWN BY:
-

CHECKED BY:
JF

SCALE:
AS SHOWN

SHEET No.
A-1.8
OF

GENERAL ROOFING NOTES:

1. ROOFING PLAN IS GENERAL IN NATURE AND INDICATES APPROXIMATE CONDITIONS AT THE PROJECT SITE. THE CONTRACTOR SHALL NOTIFY THE ARCHITECT OF ANY DISCREPANCIES PRIOR TO PROCEEDING WITH THE WORK. THE CONTRACTOR SHALL BE RESPONSIBLE FOR FIELD SURVEY IN REGARD TO QUANTITY, DIMENSIONS, ELEVATIONS, ROOF SLOPES CONDITIONS AND CONFORMANCE TO CODE.

2. CONTRACTOR SHALL CAREFULLY EXECUTE ALL WORK TO CARRY OUT ALL WORK REQUIRED TO MEET THE INTENT OF THE DRAWINGS.

3. ALL ROOF MOUNTED EQUIPMENT, CURBS, WOODWORK AND SHEET METAL WORK SHALL BE FASTENED SAFELY TO RESIST A MINIMUM 146 MPH WIND VELOCITY, AS SPECIFIED PER F.B.C. (2007 EDITION) UNLESS OTHERWISE NOTED.

4. CONTRACTOR SHALL PERFORM A ROOF SLOPE SURVEY TO VERIFY SLOPE CONDITIONS OF THE PROJECT PRIOR TO COMMENCEMENT OF ROOFING WORK. AN ADDITIONAL SURVEY SHALL BE CONDUCTED AFTER COMPLETION OF ROOFING WORK FOR CONFORMANCE TO THE REQUIREMENT OF THE CONTRACT DOCUMENTS.

5. CONTRACTOR TO NOTE THAT ALL ELECT. CONDUITS, PLUMBING PIPES AND ROOF MOUNTED EQUIPMENT SHALL BE KEPT, A MIN. OF 16" AWAY FORM HVAC CURBS AND A MIN. OF 12" AWAY FROM ADJACENT PIPING AND WALLS.

6. CRICKETS ARE REQUIRED BEHIND ALL CURB MOUNTED EQUIP. CONTRACTOR SHALL COORDINATE CURB HT TO MAINTAIN A MIN. OF 12" FLASHING HT. ROOFING MEMBRANE SYSTEM SHALL RESIST MIN. 146 MPH WIND UPLIFT ACCORDING TO BASIC WIND LOAD PRESSURES IN ANSI/ASCE 7-CHAPTER 15 & 16 , PER THE REQUIREMENT OF THE FLORIDA BUILDING CODE, 2007 EDITION.

7. CONTRACTOR TO COORDINATE WITH MECH. ELEC. AND PLUMBING AS REQUIRED.

8. CONTRACTOR TO COORDINATE WITH MECH. FOR LOCATIONS OF OPENINGS IN ROOF DECK FOR EQUIPMENT AND NOTIFY ARCHITECT PRIOR TO COMMENCING WORK OF ANY DISCREPANCIES.

REFERENCES:

1. FLORIDA BUILDING CODE, EDITION 2007 - PLUMBING AND BUILDING.

2. 5" MAX. ACCUMULATION OF RAIN WATER ON ANY PORTION OF THE ROOF PER FBC 1611.2 BUILDING, 100-YEAR, 1- HOUR RAINFALL (5" INCHES) EASTERN UNITED STATES. PER FBC FIGURE 1106.1.

3. CHAPTER 11- STORM DRAINAGE, TABLE 1106.2 SIZE OF VERTICAL CONDUCTORS AND LEADERS. FBC. 2007 EDITION.

4. SEE CHAPTER 16, FIGURE 1611.3 FOR REQUIRED AREA OF OVERFLOW SCUPPERS.

5. DRAINS OR SCUPPERS INSTALLED TO PROVIDE OVERFLOW DRAINAGE SHALL BE NOT LESS IN AGGREGATE AREA THAN AS SHOW IN FIGURE 1611.3, BUT NO LESS THAN 4 INCHES (102mm) DIMENSION IN ANY DIRECTION AND SHALL BE PLACED IN PARAPETS NOT LESS THAN 2 INCHES (51 mm) NOR MORE THAN 4 INCHES ABOVE THE LOW POINT OF THE FINISHED ROOFING SURFACE AND SHALL BE LOCATED AS CLOSE AS PRACTICAL TO REQUIRED VERTICAL LEADERS OR DOWNSPOUTS.

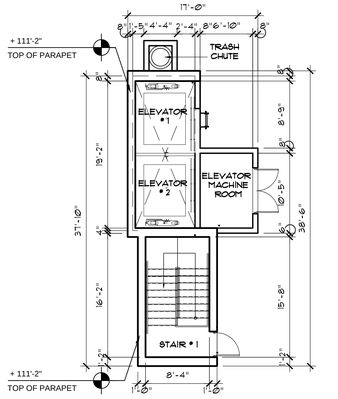

ROOF PLAN

SCALE: 1/8" = 1'-0"

SCUPPERS CALCULATIONS TABLE (Upper roof)

AREA	HORIZ. PROJECTED AREA (SQFT)	ADDITINAL AREA (SQFT)	TOTAL (SQFT.)	DISTANCE RD TO SCUPPER (FT.)	POND DEPTH (INCHES)	WATER HEAD (INCHES)	SCUPPER WEIR (INCHES)	SCUPPER DRAINAGE (SQFT.)
1	1110	220	1330	13.46	3.4	1.6	12	1431
2	840	220	1060	11.87	3.0	2.0	12	1923
3	750		750	12.62	3.1	1.9	12	1700
4	840		840	11.87	3.0	2.0	12	1923
5	820		820	11.96	3.0	2.0	12	1923
6	860		860	11.87	3.0	2.0	12	1923
7	860		860	11.96	3.0	2.0	12	1923
8	760		760	11.87	3.0	2.0	12	1923
9	780		780	11.92	3.0	2.0	12	1923
10	1130		1130	13.87	3.5	1.5	12	1310
11	930		930	13.87	3.5	1.5	12	1310
12	940		940	10.33	2.6	2.4	12	2400
13	1850		1850	11.58	2.9	2.1	12	2077
14	480	460	940	11.83	3.0	2.0	12	1923
15	867							
16	819							
17	269							

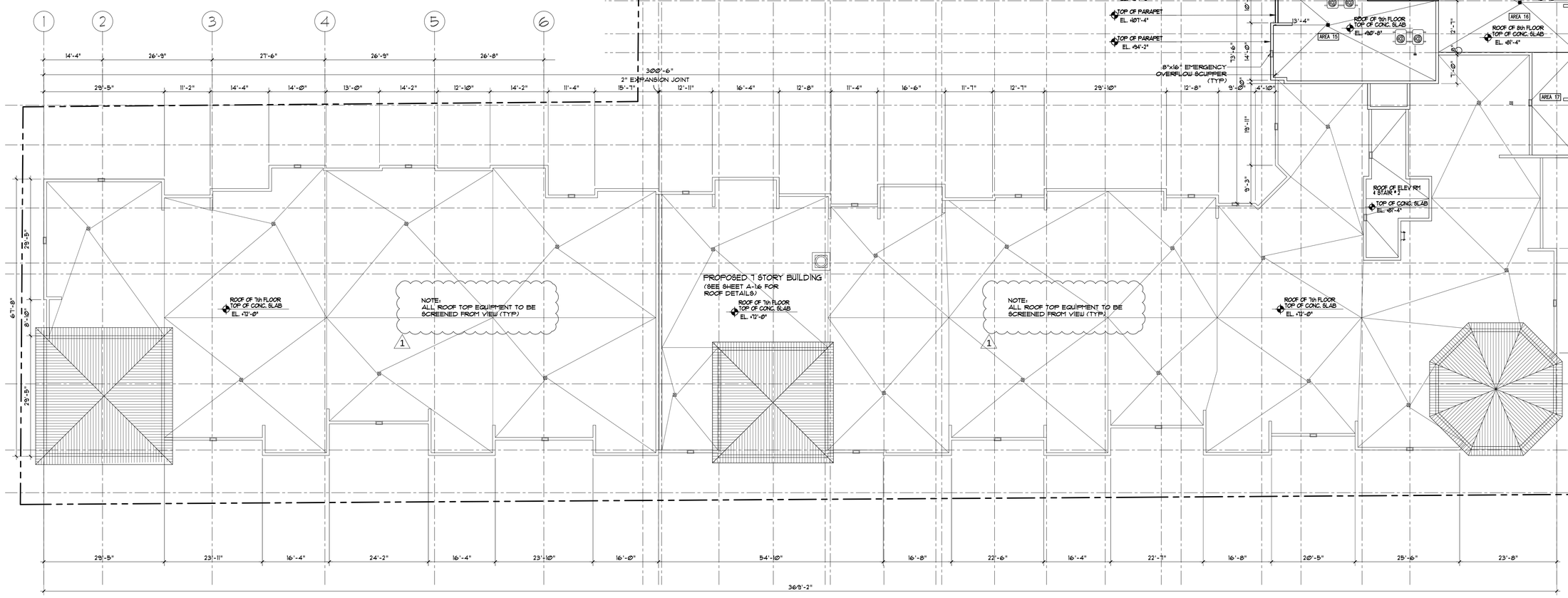

ROOF PLAN

SCALE: 3/32" = 1'-0"

ARCHITECTURE
PLANNING
INTERIORS

Certification No. AA0002451

4533 PONCE DE LEON BLVD
Coral Gables, Florida 33146
TEL: (305) 740-5442
FAX: (305) 740-5443
E-MAIL: info@beharfont.com

© 2011 BEHAR FONT & PARTNERS P.A.
THE DESIGN AND DRAWINGS FOR THIS PROJECT ARE THE PROPERTY OF THIS ARCHITECT AND ARE PROTECTED UNDER THE COPYRIGHT PROTECTION ACT.

SEAL :

Javier Font AR No. 12547

CONSULTANT :

CLIENT:

OWNER :

DATE:
04-27-2012

REVISIONS:
1 01/31/12
ZONNING DEPT.

PROJECT No.
11-011

DRAWN BY:
-

CHECKED BY:
JF

SCALE:
AS SHOWN

SHEET No.
A-1.9

OF

BEHAR · FONT & PARTNERS P.A.

PROPOSED MIXED-USE BUILDING
MERRICK MANOR
4133 LE JEUNE ROAD
CORAL GABLES, FLORIDA

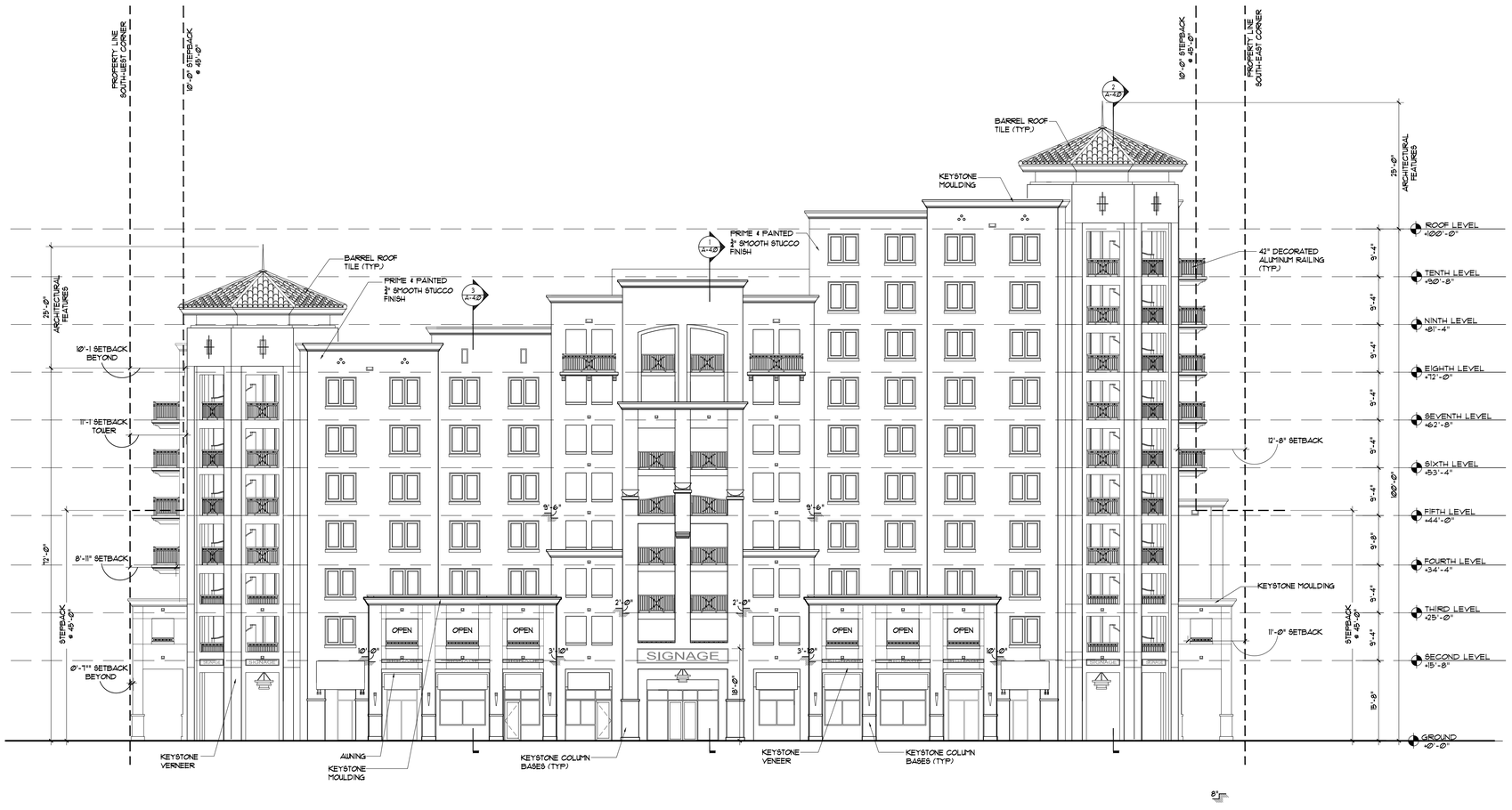

SOUTH ELEVATION

SCALE: 3/32" = 1'-0"

BEHAR · FONT & PARTNERS P.A.

ARCHITECTURE
PLANNING
INTERIORS

Certification No. AA0002451

4533 PONCE DE LEON BLVD
Coral Gables, Florida 33146
TEL: (305) 740-5442
FAX: (305) 740-5443
E-MAIL: info@beharfont.com

© 2011 BEHAR FONT & PARTNERS P.A.
THE DESIGN AND DRAWINGS FOR THIS PROJECT ARE THE PROPERTY OF THIS ARCHITECT AND ARE PROTECTED UNDER THE COPYRIGHT PROTECTION ACT.

SEAL :

Javier Font AR No. 12547

CONSULTANT :

CLIENT:

PROPOSED MIXED-USE BUILDING
MERRICK MANOR
4133 LE JEUNE ROAD
CORAL GABLES, FLORIDA

OWNER :

DATE:
03-12-2012

REVISIONS:

PROJECT No.
11-011

DRAWN BY:
-

CHECKED BY:
JF

SCALE:
AS SHOWN

SHEET No.
A-2.0
OF

EAST ELEVATION

SCALE: 3/32" = 1'-0"

BEHAR · FONT & PARTNERS P.A.

ARCHITECTURE
PLANNING
INTERIORS

Certification No. AA0002451

4533 PONCE DE LEON BLVD
Coral Gables, Florida 33146
TEL: (305) 740-5442
FAX: (305) 740-5443
E-MAIL: info@beharfont.com

© 2011 BEHAR FONT & PARTNERS P.A.
THE DESIGN AND DRAWINGS FOR THIS PROJECT ARE THE PROPERTY OF THIS ARCHITECT AND ARE PROTECTED UNDER THE COPYRIGHT PROTECTION ACT.

SEAL :

Javier Font AR No. 12547

CONSULTANT :

CLIENT:

PROPOSED MIXED-USE BUILDING
MERRICK MANOR
4133 LE JEUNE ROAD
CORAL GABLES, FLORIDA

OWNER :

DATE:
03-12-2012

REVISIONS:

PROJECT No.
11-011

DRAWN BY:
-

CHECKED BY:
JF

SCALE:
AS SHOWN

SHEET No.
A-2.1
OF

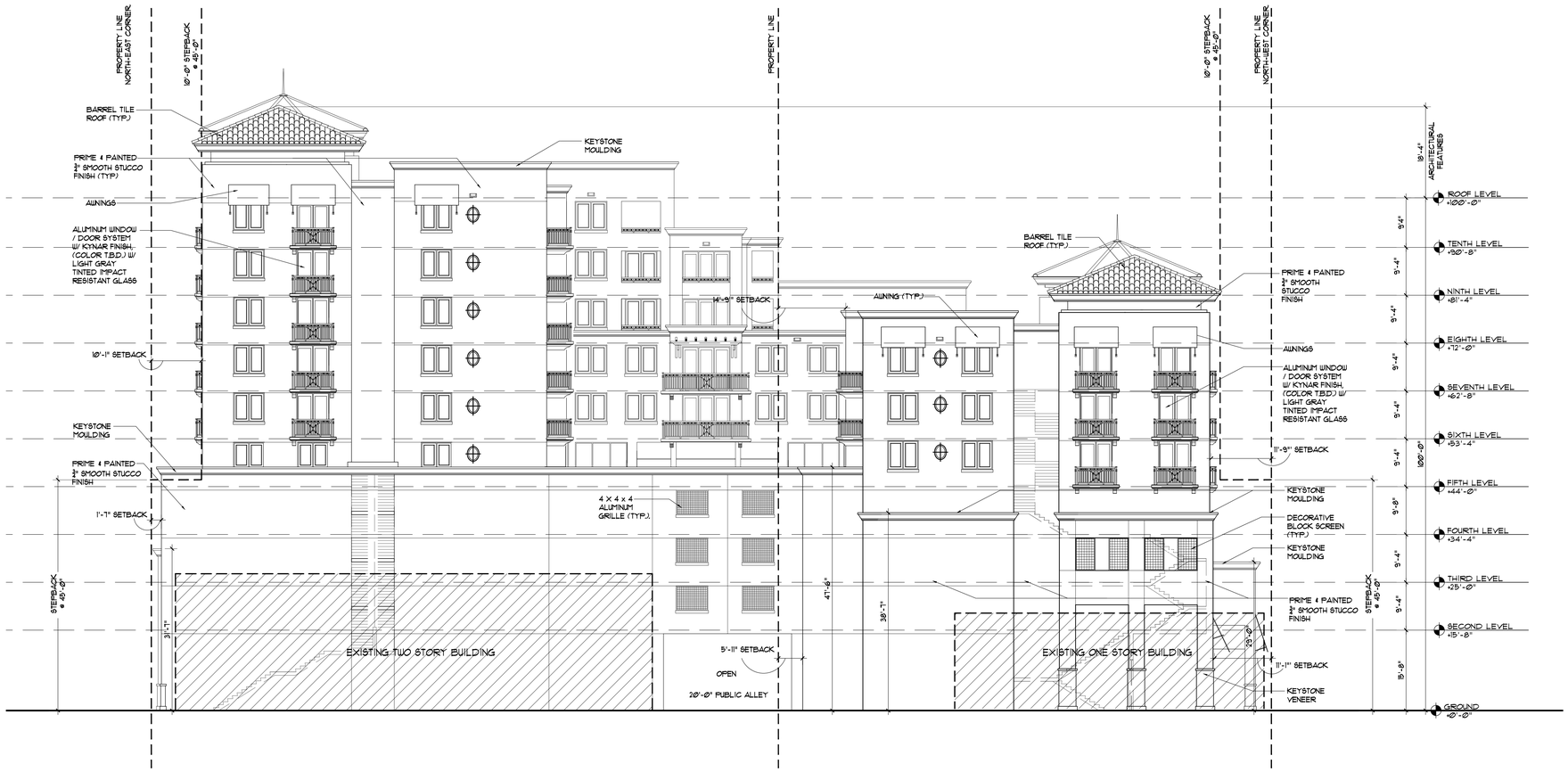

NORTH ELEVATION

SCALE: 3/32" = 1'-0"

BEHAR · FONT & PARTNERS P.A.

ARCHITECTURE
PLANNING
INTERIORS

Certification No. AA0002451

4533 PONCE DE LEON BLVD
Coral Gables, Florida 33146
TEL: (305) 740-5442
FAX: (305) 740-5443
E-MAIL: info@beharfont.com

© 2011 BEHAR FONT & PARTNERS P.A.
THE DESIGN AND DRAWINGS FOR THIS PROJECT ARE THE PROPERTY OF THIS ARCHITECT AND ARE PROTECTED UNDER THE COPYRIGHT PROTECTION ACT.

SEAL :

Javier Font AR No. 12547

CONSULTANT :

CLIENT:

PROPOSED MIXED-USE BUILDING
MERRICK MANOR
4133 LE JEUNE ROAD
CORAL GABLES, FLORIDA

OWNER :

DATE:
03-12-2012

REVISIONS:

PROJECT No.
11-011

DRAWN BY:
-

CHECKED BY:
JF

SCALE:
AS SHOWN

SHEET No.
A-2.2
OF

WEST ELEVATION

SCALE: 3/32" = 1'-0"

ARCHITECTURE
PLANNING
INTERIORS

Certification No. AA0002451

4533 PONCE DE LEON BLVD
Coral Gables, Florida 33146
TEL: (305) 740-5442
FAX: (305) 740-5443
E-MAIL: info@beharfont.com

© 2011 BEHAR FONT & PARTNERS P.A.
THE DESIGN AND DRAWINGS FOR THIS PROJECT ARE THE PROPERTY OF THIS ARCHITECT AND ARE PROTECTED UNDER THE COPYRIGHT PROTECTION ACT.

SEAL :

Javier Font AR No. 12547

CONSULTANT :

CLIENT:

OWNER :

DATE:
03-12-2012

REVISIONS:

PROJECT No.
11-011

DRAWN BY:
-

CHECKED BY:
JF

SCALE:
AS SHOWN

SHEET No.
A-2.3
OF

BEHAR · FONT & PARTNERS P.A.

PROPOSED MIXED-USE BUILDING
MERRICK MANOR
4133 LE JEUNE ROAD
CORAL GABLES, FLORIDA

Scarab™ EL740BL — KIM LIGHTING

120 Volt Die-Cast Aluminum, PAR38 Incandescent / Halogen — www.kimlighting.com Ph: 626.968.5666

LIGHTING SYMBOL ON PLAN

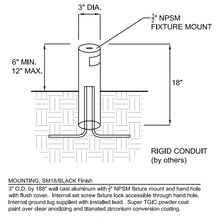

MOUNTING, SM18/BLACK Finish
3" O.D. by 18" wall cast aluminum with 2" NPSM fixture mount and hand hole with flush cover. Internal set screw fixture lock accessible through hand hole. Internal ground lug supplied with installed lead. Super TGIC powder coat paint over clear anodizing and titanated zirconium conversion coating.

NOTE: May also be used to hard mount low voltage fixtures.

Plainwell™ — Product Drawing — landscapeforms

Bench, 72" Length, with Aluminum Seat, Freestanding / Surface Mount — www.landscapeforms.com Ph: 800.521.2546

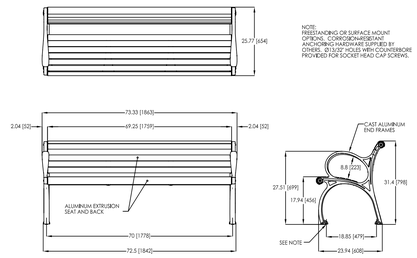

NOTE:
FREESTANDING OR SURFACE MOUNT OPTIONS. CORROSION-RESISTANT ANCHORING HARDWARE SUPPLIED BY OTHERS. Ø13/32" HOLES WITH COUNTERBORE PROVIDED FOR SOCKET HEAD CAP SCREWS.

Drawing: PL271-01
Date: 4/9/2010
Dimensions are in inches[mm]
U.S. Patent No. D419,343

CONFIDENTIAL DRAWING INFORMATION CONTAINED HEREIN IS THE PROPERTY OF LANDSCAPE FORMS, INC. INTENDED USE IS LIMITED TO DESIGN PROFESSIONALS SPECIFYING LANDSCAPE FORMS, INC. PRODUCTS AND THEIR DIRECT CLIENTS. DRAWING IS NOT TO BE COPIED OR DISCLOSED TO OTHERS WITHOUT THE CONSENT OF LANDSCAPE FORMS, INC. © 2010 LANDSCAPE FORMS, INC. ALL RIGHTS RESERVED.

TREE GRATE #M6064
STYLE: MARKET STREET

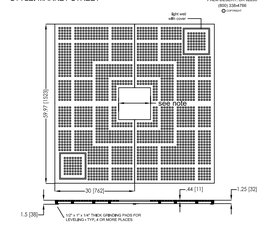

LIGHTWELL COVERS ARE BOLTED TO GRATE.
SLOT WIDTH IS 1/2" MAXIMUM. MEETS ADA COMPLIANCE.
GRATE CAST FROM IRON OR ALUMINUM
TREE OPENING SIZE. 12", 18" OR 30"
STEEL ANGLE FRAME REQUIRED
FOR INSTALLATION USE MODEL 6000F-CS
OUTER FRAME DIM. IS 3/4" & 1/8"
GREATER THAN GRATE.

This drawing embodies a confidential proprietary design of IRONSMITH Palm Desert, CA. All design, manufacturing, reproduction, use, sale, and other rights regarding the same are expressly reserved. This drawing is submitted under confidential relationship for a specific purpose and the recipient agrees by accepting this drawing not to supply or disclose any information regarding it to any unauthorized person or to incorporate any special feature peculiar to this design in other projects. The information disclosed in this drawing may be covered completely or in part by patents pending. Designers may incorporate this drawing in their plans for the purpose of showing design intent. This drawing is not to be used for the purpose of product production.

Scarborough™ — Product Drawing — landscapeforms

Litter Receptacle, Side Opening, 30 Gallon, Vertical Strap, with Lock and Sand Pan — www.landscapeforms.com Ph: 800.521.2546

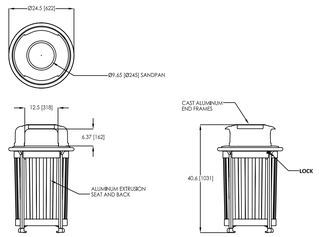

NOTE:
FREESTANDING OR SURFACE MOUNT OPTIONS. CORROSION-RESISTANT ANCHORING HARDWARE SUPPLIED BY OTHERS. Ø13/32" HOLES WITH COUNTERBORE PROVIDED FOR SOCKET HEAD CAP SCREWS.

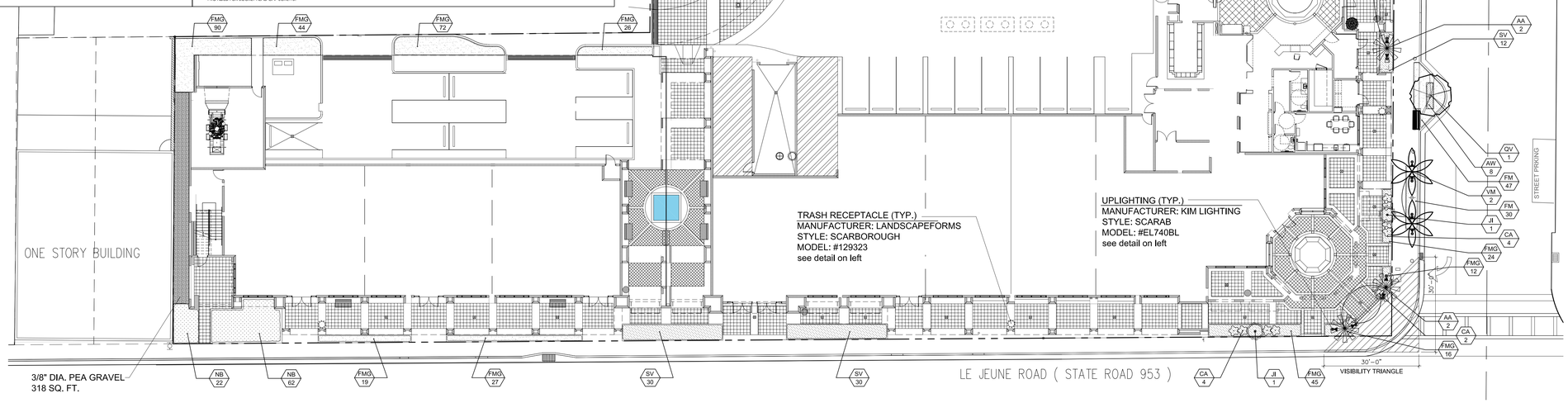

Landscape Plan - Ground Floor

Scale: 1/16"=1'-0"

NOTE: LIGHTING:
Street lighting shall be provided and located on all streets/rights-of-way. The type of fixture shall be the approved City of Coral Gables light fixture and location/spacing, etc. shall be the subject to review and approval by the Department of Public Works.

STRUCTURAL SOIL:
Structural soil shall be utilized within all rights-of-way for all street level planting areas with root barriers approved by the Public Service Department.

IRRIGATION:
a. At the time of installation, all newly planted and relocated plant material shall be watered by temporary or permanent irrigation systems that produce a minimum of one hundred and ten (110%) percent plant material coverage.
b. Irrigation shall be prohibited within native plant communities and natural forest communities, except for temporary systems needed to establish newly planted material. Temporary irrigation systems shall be disconnected immediately after establishment of plant communities. Irrigation systems shall be designed to conserve water by allowing differential operation schedules based on hydrozone.
c. Irrigation systems shall be designed, operated, and maintained to not overthrow or overflow onto any impervious surfaces.
i. Low trajectory spray heads, and/or low volume water distributing or application devices, shall be used. Overhead irrigation systems shall only be permitted in bonafide agricultural activity areas.
ii. Gray water shall be used where approved systems are available.
iii. A moisture or rain sensor device shall be required on all irrigation systems equipped with automatic controls. Irrigation systems shall be timed to operate only during hours and on days permitted under Miami-Dade County Code.

ON-SITE LANDSCAPE LIST

SYMBOL	QUAN.	PROPOSED MATERIAL	SPECIFICATIONS
TREES/PALMS			
AA	6	Archontophoenix alexandre	22' O.A. HTS.
		ALEXANDER PALM	F.G.
SHRUBS AND GROUNDCOVERS			
CA	20	Crinum augusum 'Queen Emma'	36" HT. X 24" SPR.
		CRINUM LILY	7 GAL.
FMG	501	Ficus microcarpa 'Green Island'	15" HT. X 15" SPR. / 18" O.C.
		GREEN ISLAND FICUS	3 GAL.
JI	4	Jatropha integerima	5' O.A. HT.
		RED STANDARD PEREGRINA	15 GAL. STD.
NB	84	Nephrolepis exaltata	24" HT. X 24" SPR. / 24" O.C.
		BOSTON FERN	3 GAL.
SV	84	Schefflera variegata 'Trinette'	24" HT. X 24" SPR. / 24" O.C.
		VARIEGATED SCHEFFLERA	3 GAL.

* DENOTES NATIVE SPECIES

OFF-SITE LANDSCAPE LIST

SYMBOL	QUAN.	PROPOSED MATERIAL	SPECIFICATIONS
TREES/PALMS			
QV	6	*Quercus virginiana	16' HT. X 6' SPR. 3 1/2" CAL. MIN.
		LIVE OAK	F.G.
VM	13	Vietchia montgomerana	18' O.A. HT.
		MONTGOMERY PALM	F.G., SINGLE TRUNK
SHRUBS AND GROUNDCOVERS			
AW	32	Acalypha wilkesiana	24" HT. X 18" SPR. / 18" O.C.
		COPPER LEAF	3 GAL.
FM	707	Ficus microcarpa 'Green Island'	15" HT. X 15" SPR. / 18" O.C.
		GREEN ISLAND FICUS	3 GAL.

* DENOTES NATIVE SPECIES

LANDSCAPE LEGEND Information Required to be Permanently Affixed to Plan

Zoning District: "C" & "I" W/ MXD OVERLAY — Net Lot Area 1.5 ac acres 65,348 s.f.

OPEN SPACE	REQUIRED/ ALLOWED	PROVIDED
A. Square Feet of open space required by Article 5, Development Standards: Net lot area = 65,348 s.f. x 10 % = 6,534 s.f.	6,534	8,660
TREES		
STREET TREES (maximum average spacing of 35' o.c.):		DEFICIENCY
B. 210 linear feet along Laguna Street =	6	11	+5
C. 170 linear feet along Altara Avenue =	5	8	+3
D. 360 linear feet along Le June Road =	11	0	-11
		-3 STREET TREES
E. Total Trees Required	22	19
ESTIMATED TOTAL COST ($250/TREE) = $750.00		
SHRUBS		
A. No. trees required x 10= No. of shrubs allowed	220	224

NO COPIES, REPRODUCTIONS, TRANSMISSIONS OR ELECTRONIC MANIPULATION OF ANY PORTION OF THESE DRAWINGS IN WHOLE OR IN PART ARE TO BE MADE WITHOUT THE EXPRESS WRITTEN PERMISSION OF BEHAR FONT & PARTNERS, P.A. ALL DESIGNS INDICATED IN THESE DRAWINGS ARE PROPERTY OF BEHAR FONT & PARTNERS, P.A. ALL COPYRIGHTS RESERVED (C) 2008. THESE PLANS ARE FOR BUILDING DEPARTMENT REVIEW ONLY THEY ARE NOT TO BE CONSTRUED AS CONSTRUCTION DOCUMENTS UNTIL ALL BUILDING DEPARTMENT APPROVALS ARE OBTAINED.

BEHAR • FONT & PARTNERS, P.A.
ARCHITECTURE
PLANNING
INTERIORS
Certification No. AA0002451
4533 PONCE DE LEON BLVD.
Coral Gables, Florida 33146
TEL: (305) 740-5442
FAX: (305) 740-5443
E-MAIL: info@beharfont.com

© 2011 BEHAR FONT & PARTNERS P.A. THE DESIGN AND DRAWINGS FOR THIS PROJECT ARE THE PROPERTY OF THIS ARCHITECT AND ARE PROTECTED UNDER THE COPYRIGHT PROTECTION ACT.

SEAL:

Javier Font AR No. 12547
CONSULTANT:
WITKIN HULTS DESIGN GROUP
227 South 21st Avenue Hollywood, Florida
phone: 954.923.9681 facsimile: 954.923.9689
www.witkinhultsdesign.com

PROPOSED RESIDENTIAL BUILDING
MERRICK MANOR
4133 LE JEUNE ROAD.
CORAL GABLES, FLORIDA

OWNER:

DATE: 07-29-11

REVISIONS:
01-25-12
01-31-12
02-14-12
03-06-12
03-13-12
03-15-12
03-16-12
04-05-12
04-26-12

PROJECT No. 11-011

DRAWN BY: ST

CHECKED BY: KH

SCALE: AS SHOWN

SHEET No. L-1

OF

L-3

UPLIGHTING (TYP.)
MANUFACTURER: KIM LIGHTING
STYLE: SCARAB
MODEL: #EL740BL
see detail on SHEET L-1

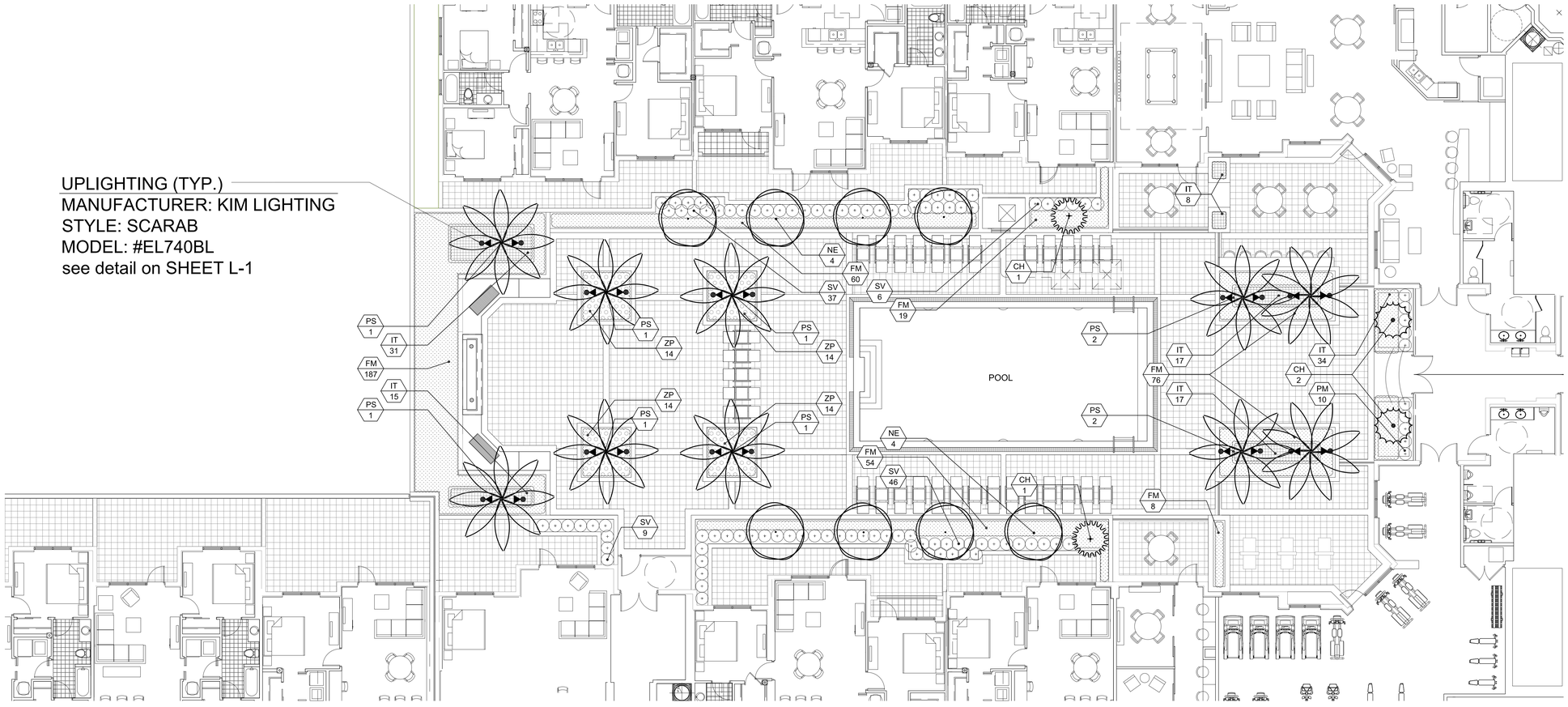

Landscape Plan - Level 2

Scale: 1/8"=1'-0"

NORTH

LANDSCAPE LIST

TREES/PALMS			
SYMBOL	QUAN.	PROPOSED MATERIAL	SPECIFICATIONS
CH	4	Chamearops humilis	3' O.A. HT.
		EUROPEAN FAN PALM	7 GAL., FULL
NE	8	Noronhia emarginata	12' HT. X 5' SPR. 2 1/2" CAL. MIN
		MADAGASCAR OLIVE	F. G.
PS	10	Phoenix sylvestris	10' C.T. MATCHED
		SILVER DATE PALM	F.G.

SHRUBS AND GROUNDCOVERS			
SYMBOL	QUAN.	PROPOSED MATERIAL	SPECIFICATIONS
FM	404	Ficus microcarpa 'Green Island'	15" HT. X 15" SPR. / 18" O.C.
		GREEN ISLAND FICUS	3 GAL.
IT	122	Ixora taiwanese 'Dwarf'	18" HT. X 18" SPR. / 18" O.C.
		DWARF IXORA	3 GAL.
PM	10	Podocarpus macrophyllus	24" HT. X 24" SPR. / 24" O.C.
		PODOCARPUS	3 GAL.
SV	98	Schefflera variegata 'Trinette'	24" HT. X 24" SPR. / 24" O.C.
		VARIEGATED SCHEFFLERA	3 GAL.
ZP	56	*Zamia pumila	18" HT. X 18" SPR. / 24" O.C.
		COONTIE	7 GAL.

* DENOTES NATIVE SPECIES

NO COPIES, REPRODUCTIONS, TRANSMISSIONS OR ELECTRONIC MANIPULATION OF ANY PORTION OF THESE DRAWINGS IN WHOLE OR IN PART ARE TO BE MADE WITHOUT THE EXPRESS WRITTEN PERMISSION OF BEHAR FONT & PARTNERS, P.A. ALL DESIGNS INDICATED IN THESE DRAWINGS ARE PROPERTY OF BEHAR FONT & PARTNERS, P.A. ALL COPYRIGHTS RESERVED (C) 2008. THESE PLANS ARE FOR BUILDING DEPARTMENT REVIEW ONLY THEY ARE NOT TO BE CONSTRUED AS CONSTRUCTION DOCUMENTS UNTIL ALL BUILDING DEPARTMENT APPROVALS ARE OBTAINED.

BEHAR • FONT & PARTNERS, P.A.
ARCHITECTURE
PLANNING
INTERIORS
Certification No. AA0002451
4533 PONCE DE LEON BLVD.
Coral Gables, Florida 33146
TEL: (305) 740-5442
FAX: (305) 740-5443
E-MAIL: info@beharfont.com

© 2001 BEHAR FONT & PARTNERS P.A.
THE DESIGN AND DRAWINGS FOR THIS PROJECT ARE THE PROPERTY OF THIS ARCHITECT AND ARE PROTECTED UNDER THE COPYRIGHT PROTECTION ACT.

SEAL:

Javier Font AR No. 12547

CONSULTANT:

WITKIN HULTS DESIGN GROUP
207 south 21st avenue hollywood, fl33020
phone: 954.923.9681 facsimile: 954.923.9689
www.wdhdesign.com

PROPOSED RESIDENTIAL BUILDING
MERRICK MANOR
4133 LE JEUNE ROAD,
CORAL GABLES, FLORIDA

OWNER:

DATE:
07-29-11

REVISIONS:
03-06-12
03-13-12

PROJECT No.
11-011

DRAWN BY:
ST

CHECKED BY:
AW

SCALE:
AS SHOWN

SHEET No.
L-2

OF
L-3

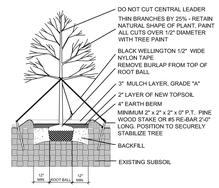

LARGE TREE PLANTING DETAIL

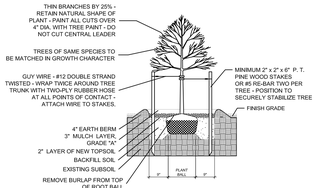

SMALL TREE PLANTING DETAIL

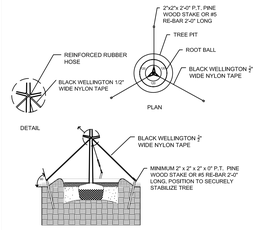

TYPICAL TREE GUYING DETAIL

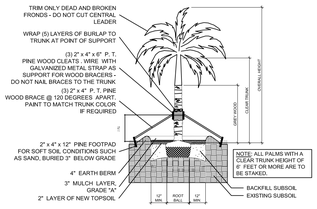

STRAIGHT TRUNK PALM PLANTING DETAIL

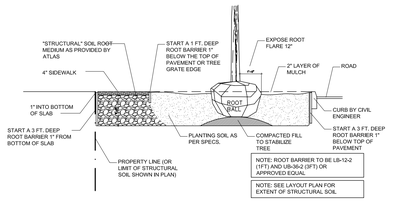

STRUCTURAL SOIL / SIDEWALK DETAIL

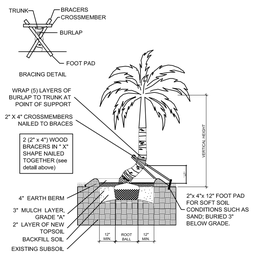

CURVED TRUNK PALM PLANTING DETAIL

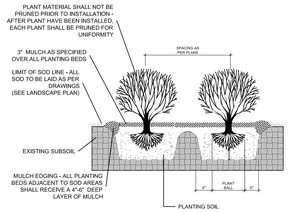

TYPICAL SHRUB PLANTING DETAIL

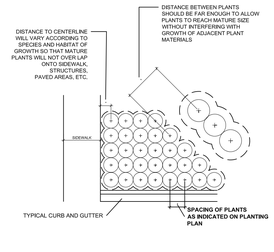

TYPICAL CONTAINER SPACING DETAIL

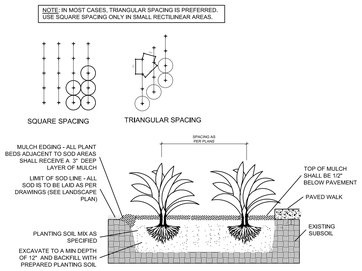

TYPICAL GROUNDCOVER PLANTING DETAIL

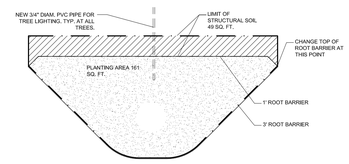

PLANTING DETAIL AT BUMP OUT

PLANTING NOTES:

-All plant material is to be Florida Number 1 or better pursuant to the Florida Department of Agriculture's Grades and Standards for Nursery Plants.

-All plants are to be top dressed with a minimum 3" layer of Melaleuca mulch, Eucalyptus mulch or equal.

-Planting plans shall take precedence over plant list in case of discrepancies.

-No changes are to be made without the prior consent of the Landscape Architect and Owner. Additions and or deletions to the plant material must be approved by the project engineer.

-Landscape Contractor is responsible for providing their own square footage takeoffs and field verification for 100% sod coverage for all areas specified.

- All landscape areas are to be provided with automatic sprinkler system which provide 100% coverage, and 50% overlap.

- All trees in lawn areas are to receive a 24" diameter mulched saucer at the base of the trunk.

- Trees are to be planted within parking islands after soil is brought up to grade. Deeply set root balls are not acceptable.

- Planting soil for topsoil and backfill shall be 50/50 mix, nematode free. Planting soil for annual beds to be comprised of 50% Canadian peat moss, 25% salt free coarse sand and 25% Aerolite.

- Tree and shrub pits will be supplemented with "Agriform Pells", 21 gram size with a 20-10-5 analysis, or substitute application accepted by Landscape Architect. Deliver in manufacturer's standard containers showing weight, analysis and name of manufacturer.

SOD NOTES:

-Sod is to be grade "A" weed free.

-All areas marked "LAWN" shall be solid sodded with St. Augustine 'Floratam' solid sod.See limit on plan. All areas marked 'Bahia Grass' shall be solid sodded with Paspalum.

-Provide a 2" deep blanket of planting soil as described in planting notes this sheet. Prior to planting, remove stones, sticks, etc. from the sub soil surface. Excavate existing non-conforming soil as required so that the finish grade of sod is flush with adjacent pavement or top of curb as well as adjacent sod in the case of sod patching.

-Place sod on moistened soil, with edges tightly butted, in staggered rows at right angles to slopes.

-Keep edge of sod bed a minimum of 18" away from groundcover beds and 24" away from edge of shrub beds and 36" away from trees, measured from center of plant.

-Sod Shall be watered immediatley after installation to uniformily wet the soil to at least 2" below the bottom ofthe sod strips.
-Excavate and remove excess soil so top of sod is flush with top of curb or adjacent pavement or adjacent existing sofd.

GENERAL NOTES:

-The Landscape Contractor is to locate and verify all underground and overhead utilities prior to beginning work. Contact proper utility companies and / or General Contractor prior to digging for field verification. The Owner and the Landscape Architect shall not be responsible for any damages to utility or irrigation lines (see Roadway Plans for more utility notes).

-Landscape Contractor is to verify all current drawings and check for discrepancies and bring to the attention of the Landscape Architect prior to commencing with the work.

-All unattended and unplanted tree pits are to be properly barricaded and flagged during installation.

-All planting plans are issued as directives for site layout. Any deviations, site changes, etcetera are to be brought to the attention of the Landscape Architect for clarification prior to installation.

Surround Style Planting with Deeproot Universal Barriers

When selecting the Surround style planting application you will have the greatest success by following these simple steps as illustrated below:

A. Prepare the initial planting hole as illustrated below. This is based upon the combination of desired barrier diameter and depth. Consider if drainage devices or amendments are needed to correct any adverse soil or planting conditions in the backfill area.

B. Assemble the appropriate number of DeepRoot Universal Barrier panels. The vertical root deflecting ribs on the panel must face inward, toward the root ball. (This is very important, otherwise the roots will become girdled by traveling around the smooth walled surface)

C. Next place the barrier in the center of the planting hole, keeping in mind that the double top edge of the barrier should be positioned approximately 1/2" (13mm) above grade. This helps retard potential root overgrowth. Failing to position the top edge above grade can allow root overgrowth which can lead to uprooted hardscapes.

D. Backfill and compact with soil inside the barrier to the level where the bottom of the root ball will be when positioned correctly with the crown of the root ball approximately 1" (26mm) above grade.

E. Remove the tree from its container, or cut away the top portion of burlap and position in the center of the barrier. Complete the backfill of the soil. Distribute evenly to maintain the shape of the barrier and compact the backfill every 4"-6" (10cm-15cm). Roots will die quickly if left exposed to the elements so keep exposure of the roots to a minimum.

F. If staking or guying is required we recommend using the soft, safe and economical alternative to traditional wire and hose, ArborTie (see www.deeproot.com for details)

G. If the tree(s) will be subject to maintenance work such as lawn mowing or weed trimming we strongly recommend the installation of ArborGard+ Tree Trunk Protectors which are placed around the base of young trees to protect them from damage by weed trimmers, lawn mowers and small rodents. (See www.deeproot.com)

H. Water and follow proper tree maintenance practices.

Trees do require care and nurturing after planting. Consult with your local supplier for proper care procedures for the species you are planting. The planting instructions given here are by no means a comprehensive guide. Rather they are general guidelines to planting with DeepRoot Barriers and a survey of current planting methods. Conditions will vary however and it is recommended that an Arborist be consulted before planting.

For additional information please visit our website at www.deeproot.com

For information regarding distributors please call: 1 800 ILV ROOT (458.7668). For help with drainage or other difficult installation questions please call DeepRoot Technical Support at: 1 800 ROOT TEK (766.8835).

A Typical Surround Planting Installation Using DeepRoot Universal Barrier

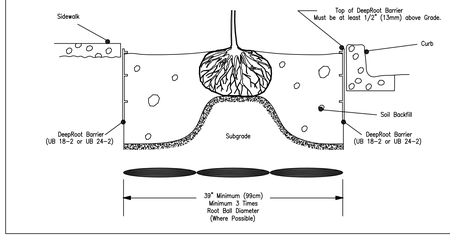

Landscape Notes & Details

ARCHITECTURE
PLANNING
INTERIORS
Certification No. AA0002451

4533 PONCE DE LEON BLVD.
Coral Gables, Florida 33146
TEL: (305) 740-5442
FAX: (305) 740-5443
E-MAIL: info@beharfont.com

© 2011 BEHAR FONT & PARTNERS P.A. THE DESIGN AND DRAWINGS FOR THIS PROJECT ARE THE PROPERTY OF THIS ARCHITECT AND ARE PROTECTED UNDER THE COPYRIGHT PROTECTION ACT.

SEAL:

Javier Font AR No. 12547
CONSULTANT:

WITKIN HULTS DESIGN GROUP
227 South 21st Avenue Hollywood, Florida
phone: 954.923.9661 facsimile: 954.923.9669
www.witkinhultsdesign.com

PROJECT INFO

PROPOSED RESIDENTIAL BUILDING
MERRICK MANOR
4133 LE JEUNE ROAD.
CORAL GABLES, FLORIDA

OWNER:

DATE:
07-29-11

REVISIONS:
01-25-12
01-31-12
04-05-12
04-26-12

PROJECT No.
11-011

DRAWN BY:
ST

CHECKED BY:
KH

SCALE:
AS SHOWN

SHEET No.
L-3

OF

L-3

NO COPIES, REPRODUCTIONS, TRANSMISSIONS OR ELECTRONIC MANIPULATION OF ANY PORTION OF THESE DRAWINGS IN WHOLE OR IN PART ARE TO BE MADE WITHOUT THE EXPRESS WRITTEN PERMISSION OF BEHAR FONT & PARTNERS, P.A. ALL DESIGNS INDICATED IN THESE DRAWINGS ARE PROPERTY OF BEHAR FONT & PARTNERS, P.A. ALL COPYRIGHTS RESERVED (C) 2008. THESE PLANS ARE FOR BUILDING DEPARTMENT REVIEW ONLY THEY ARE NOT TO BE CONSTRUED AS CONSTRUCTION DOCUMENTS UNTIL ALL BUILDING DEPARTMENT APPROVALS ARE OBTAINED.

INDEX OF SHEETS

C-1	COVER SHEET
C-2	GEOMETRY PLAN
C-3	PAVING & DRAINAGE PLAN
C-4	PAVEMENT MARKING & SIGNING PLAN
C-5	PAVING & DRAINAGE DETAILS
C-6	TYPICAL SECTIONS & DETAILS

DEMOLITION NOTES:

1.- UNLESS OTHERWISE NOTED, ALL EXISTING IMPROVEMENTS WITHIN THE LIMITS OF WORK SHALL BE REMOVED IN THEIR ENTIRETY.
2.- ASPHALT PAVEMENT DESIGNATED FOR DEMOLITION SHALL BE REMOVED AND DISPOSED OF OFF-SITE AT AN APPROVED LOCATION. SAW CUT ALL PAVEMENT EDGES WHERE EXISTING PAVEMENT IS TO REMAIN.
3.- IN GREEN AREAS, EXISTING LIMEROCK SUBBASE SHALL BE SCARIFIED TO ITS FULL DEPTH AND SHAPED TO THE LINES AND GRADES SHOWN IN THESE DRAWINGS.
4.- ALL EXISTING DRAINAGE IMPROVEMENTS WITHIN THE LIMITS OF WORK, IF ANY, SHALL BE REMOVED, INCLUDING STRUCTURES, PIPES, AND FRENCH DRAINS.

TRENCH SAFETY ACT

1. TRENCHING: PROVIDE PROPERLY EXECUTED "TRENCH SAFETY ACT" STATEMENT (2 COPIES). FOR ALL EXCAVATIONS THAT EXCEED FIVE (5) FEET IN DEPTH FROM THE EXISTING SURFACE ELEVATION, THE CONTRACTOR MUST ASSURE THAT ALL PROVISIONS OF THE FLORIDA STATE BILL CS/SB 2626, THE 1990 "TRENCH SAFETY ACT" SHALL BE MET. THE BIDDER MUST IDENTIFY THE METHOD OR METHODS OF COMPLIANCE WITH THE "TRENCH SAFETY ACT". THE BIDDER MUST IDENTIFY THE COST TO COMPLY WITH THESE STANDARDS± EITHER ON A COST PER LINEAR FOOT OF TRENCH EXCAVATION AND/OR A COST PER SQUARE FOOT OF SHORING USED. NO SEPARATE PAYMENT WILL BE MADE FOR THESE ITEMS, BUT THEY MUST BE IDENTIFIED IN THE/THIS PROPOSAL/CERTIFICATE OF COMPLIANCE - TRENCH SAFETY ACT.

CONTRACTOR'S STATEMENT:

"WE WILL USE":

( ) SLOPING - ( ) SHORING - ( ) TRENCH BOX - ( ) OTHER

METHODS (SPECIFY WHICH) TO COMPLY WITH THE 1990 "TRENCH SAFETY ACT".

A. THE CURRENT TRENCH SAFETY STANDARDS IN EFFECT ARE OCCUPATIONAL SAFETY AND HEALTH ADMINISTRATIONS (OSHA) EXCAVATING SAFETY STANDARDS 29 C.F.R. PART 1926.650 SUBPART P.

B. THE COST OF COMPLIANCE WITH THIS TRENCH SAFETY ACT IS INCLUDED AS PART OF THE LUMP SUM OR UNIT FRICE PROPOSALS CONTAINED IN THE BID PACKAGE.

C. THE COST OF COMPLYING WITH THIS REQUIREMENT IS:

1) COST PER LIN. FT. OF TRENCH EXCAVATION $ _____

2) COST PER SQ. FT. OF SHORING USED $ _____

CONTRACTOR: _____ DATE: _____

NOTES:

1. ALL EXISTING UTILITIES BEING REMOVED AND/OR RELOCATED MUST REMAIN ACTIVE AND IN SERVICE, UNTIL SUCH TIME WHEN NEW REPLACING UTILITIES HAVE BEEN INSTALLED, IN SERVICE, ACCEPTED BY THE DEPARTMENT AND ALL RELATED SERVICES FROM THE EXISTING MAINS HAVE BEEN TRANSFERRED TO THE NEW ONES, BY M-DWASD FORCES AT OWNER'S EXPENSE AS APPLICABLE.

2. ALL WATER AND/OR SEWER FACILITIES LOCATED IN PRIVATE PROPERTY SHALL BE REMOVED AFTER ALL INSTALLED SERVICES FROM THEM HAVE BEEN TRANSFERRED TO THE ALREADY INSTALLED AND IN SERVICE NEW MAINS. ANY ASSOCIATED EXCLUSIVE EASEMENTS SHALL BE CLOSED AND VACATED PRIOR TO THE REMOVAL OF THE EXISTING WATER AND/OR SEWER FACILITIES.

UNDERGROUND DIGGING NOTE:

1. - CONTRACTOR SHALL USE EXTREME CAUTION WHEN EXCAVATING.
2. - CONTRACTOR SHALL REMAIN 2 FEET AWAY FROM THE LOCATED MARKS WITH THE MACHINERY. IF IT'S NECESSARY TO EXCAVATE WITHIN THE 2 FOOT TOLERANCE ZONE, CONTRACTOR MUST HAND DIG, SOFT DIG, OR USE NON-INVASIVE MEANS TO EXPOSE AND PROTECT THE EXISTING FACILITIES AS REQUIRED BY LAW.

GENERAL NOTES:

1. VERTICAL CONTROL POINTS AND ALL ELEVATIONS ARE BASED ON 1929 NGVD DATUM.

2. THE CONTRACTOR SHALL CONFIRM ALL HORIZONTAL AND VERTICAL CONTROL POINTS PRIOR TO USE. THE CONTRACTOR SHALL CONFIRM ALIGNMENT AND ELEVATIONS OF ADJACENT WORK PRIOR TO BEGINNING CONSTRUCTION. ALL DISCREPANCIES SHALL BE IMMEDIATELY BROUGHT TO THE OWNER'S ATTENTION.

3. ALL EXISTING UTILITIES SHALL REMAIN IN SERVICE, UNLESS OTHERWISE NOTED.

4. USE EXTREME CAUTION NEAR ALL UTILITIES, CABLES, CONDUITS, AND MANHOLES. CONTRACTOR TO PROVIDE PROTECTION DURING CONSTRUCTION TO ASSURE SERVICE AT ALL TIMES. CONTRACTOR SHALL COORDINATE ALL SCHEDULES WITH FIELD REPRESENTATIVE PRIOR TO WORKING AROUND UTILITIES.

5. CONTRACTOR SHALL BE RESPONSIBLE FOR BECOMING FAMILIAR WITH CURRENT SITE CONDITIONS AND SHALL REPORT ANY DISCREPANCIES ON THE PLANS TO THE ENGINEER PRIOR TO COMMENCING WORK.

6. ALL CONSTRUCTION LAYOUT SHALL BE THE RESPONSIBILITY OF THE CONTRACTOR. THE CONTRACTOR SHALL BE RESPONSIBLE FOR ESTABLISHING THE WORK LIMIT LINES AS SHOWN ON THE PLANS AND SHALL WORK WITHIN THE LIMITS AND DIMENSIONS SHOWN. ALL PAVEMENT DIMENSIONS ARE TO THE EDGE OF PAVEMENT. ANY DEVIATION FROM THE PLANS SHALL REQUIRE WRITTEN APPROVAL FROM THE ENGINEER PRIOR TO EXECUTING WORK.

7. GRADING SHALL CONSIST OF ALL EXCAVATION, BACKFILLING, SHAPING AND SLOPING NECESSARY FOR THE CONSTRUCTION, PREPARATION AND COMPLETION OF ALL WORK AND OTHER AREAS, ALL IN ACCORDANCE WITH THE LAYOUT AND GRADES SHOWN ON THESE DRAWINGS. SAWCUT ALL PAVEMENT EDGES WHERE EXISTING PAVEMENT IS TO REMAIN.

8. CONTRACTOR SHALL BE RESPONSIBLE FOR PROTECTING AND RESTORING ALL ADJACENT IMPROVEMENTS. CONTRACTOR SHALL BE RESPONSIBLE FOR RESETTING ALL DISTURBED EXISTING MANHOLE COVERS, VALVE BOXES, BLOW-OFF RISERS, ETC. TO NEW ELEVATIONS, AS REQUIRED, WHETHER SPECIFICALLY SHOWN ON DRAWINGS OR NOT.

9. THE CONTRACTOR SHALL NOTIFY ALL UTILITY COMPANIES THAT MAY BE AFFECTED BY THE PROPOSED WORK, PRIOR TO THE START OF ANY CONSTRUCTION, TO ARRANGE FOR PHYSICAL LOCATION AND ELEVATION OF ALL UNDERGROUND IMPROVEMENTS. IT IS THE CONTRACTOR'S RESPONSIBILITY TO PROVIDE THE UTILITY COMPANY SUFFICIENT NOTICE TO SCHEDULE ANY RELOCATION OF THEIR UTILITIES. THE CONTRACTOR SHALL BE RESPONSIBLE FOR SUPPORT OF ANY UTILITY THAT MAY BE IN CONFLICT WITH OR ENDANGERED BY THE PROPOSED WORK.

10. ALL OVERHEAD OR SURFACE STRUCTURES AND UTILITIES ENCOUNTERED ARE TO BE CAREFULLY PROTECTED FROM DAMAGE OR DISPLACEMENT. ALL DAMAGE TO SUCH STRUCTURES SHALL BE COMPLETELY REPAIRED WITHIN THE TIME FRAME OF THE CONSTRUCTION. THE OWNER RESERVES THE RIGHT TO REMEDY SUCH DAMAGE BY ORDERING OUTSIDE PARTIES TO MAKE SUCH REPAIRS AT THE EXPENSE OF THE CONTRACTOR.

11. THE CONTRACTOR MAY STORE EQUIPMENT AND MATERIALS WITHIN THE LIMITS OF THE SITE. THE CONTRACTOR SHALL MAINTAIN THESE AREAS IN A CLEAN AND ORDERLY CONDITION SO AS NOT TO CAUSE A NUISANCE IN THE AREA. THE CONTRACTOR SHALL RESTORE THE STORAGE AREA TO ITS ORIGINAL OR BETTER CONDITION, WITH ALL ITS APPURTENANCES, IN KIND, TO THE SATISFACTION OF THE ENGINEER AND OWNER.

12. COMPLETE "AS-BUILT" INFORMATION RELATIVE TO LOCATION, SIZE AND DEPTH OF THE PROPOSED PIPES, STRUCTURES, AND OTHER IMPROVEMENTS SHALL BE ACCURATELY RECORDED. THIS INFORMATION SHALL BE SUBMITTED TO THE ENGINEER AS A CADD FILE AND AS A DRAWING SIGNED AND SEALED BY A PROFESSIONAL LAND SURVEYOR REGISTERED IN THE STATE OF FLORIDA AT THE CONTRACTOR'S EXPENSE.

13. THE UNDERGROUND UTILITIES SHOWN HEREON ARE BASED ON EXISTING UTILITY PLANS. NO SUBSURFACE VERIFICATION OF THE UTILITIES WAS MADE. SOME UTILITIES MAY NOT BE REFLECTED IN THESE PLANS. BEFORE EXCAVATION OR CONSTRUCTION, CONTACT THE SUNSHINE ONE CALL SERVICE #811 AND THE APPROPRIATE UTILITY COMPANIES FOR FIELD VERIFICATION. SUBSURFACE CASINGS, DUCT BANKS, FOOTINGS FOUNDATIONS, AND OTHER SUBSURFACE FEATURES ARE NOT LOCATED OR SHOWN HEREON ARE TO BE VERIFIED BY CONTRACTOR BEFORE COMMENCING ANY WORK.

14. PROVIDE 6 FOOT VINYL VISUAL BARRIER ON ALL FENCING AT CONSTRUCTION LIMITS.

15. THE CONTRACTOR SHALL BE RESPONSIBLE FOR MAINTAINING THE INTEGRITY AND MAKING THE REPAIRS OF EXISTING PAVEMENT, SIDEWALKS, PIPES, CONDUITS, CURBS, CABLES, ETC., WHETHER OR NOT SHOWN ON THE PLANS, DAMAGED AS A RESULT OF THE CONTRACTOR'S OPERATIONS AND/OR THOSE OF HIS SUBCONTRACTORS, AND SHALL RESTORE THEM PROMPTLY TO THE ORIGINAL CONDITIONS OR BETTER AT NO ADDITIONAL EXPENSE TO THE OWNER. CONTRACTOR SHALL REPORT ANY DAMAGED SIDEWALK, DRIVEWAY, ETC., PRIOR TO BEGINNING WORK IN ANY AREA.

16. EXISTING WATER METERS, UTILITY POLES & GUY WIRES AND OTHER UTILITIES WITHIN THE LIMITS OF CONSTRUCTION SHALL BE REMOVED OR RELOCATED UNLESS OTHERWISE NOTED.

17. ALL WORK SHALL CONFORM TO ALL APPLICABLE CODES, ORDINANCES, CITY OF CORAL GABLES STANDARDS AND DETAILS, MIAMI-DADE COUNTY DEPARTMENT OF ENVIRONMENTAL RESOURCES (DERM) STANDARDS AND DETAILS, FLORIDA DEPARTMENT OF TRANSPORTATION STANDARDS AND DETAILS, AND MIAMI-DADE COUNTY STANDARDS AND DETAILS.

SITE DATA

FLOOD ZONE FIRM MAP PANEL No. = 12086C457L
ZONE "X" , DATED: 09-11-2009
BASE FLOOD ELEVATION = N/A
WATER TABLE ELEVATION OCT. H.W. = (+) 2.7 NGVD
FLOOD CRITERIA ELEVATION = (+) 6.5 NGVD

MERRICK MANOR
4133 LEJEUNE ROAD, CORAL GABLES, FLORIDA

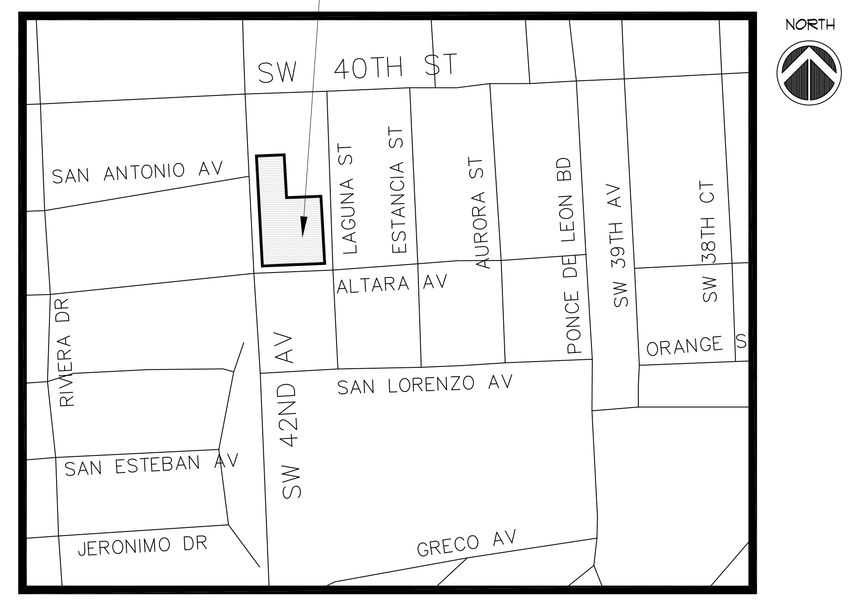

LOCATION MAP

SCALE: 1" = 300'

LEGAL DESCRIPTION

LOTS 13 THRU 36, INCLUSIVE OF BLOCK 1 OF "CORAL GABLES INDUSTRIAL SECTION" ACCORDING TO THE PLAT THEREOF AS RECORDED IN PLAT BOOK 28 AT PAGE 22 OF THE PUBLIC RECORDS OF MIAMI-DADE COUNTY, FLORIDA.

FLOOD LEGEND

Commercial, Industrial

FOLIO: 03-4120-017-0300 / 0210 / 0200 / 0190 / 0180 / 0170 / 0160 / 0140 / 0130 / 0120

LOTS: 13 THRU 36 BLOCK: 1 SUBDIVISION: "CORAL GABLES INDUSTRIAL SECTION"

PLAT BOOK: 28 PAGE: 22 METES & BOUND: _____

CROWN OF ROAD ELEV.: + 11.92 FT. N.G.V.D. , CROWN OF ROAD ELEVATION WAS TAKEN FROM A CERTIFIED SURVEY PREPARED BY: GEOFFREY LEITER, PSM PSM LIC.#. 6395
SURVEYOR'S NAME

DRAINAGE PLANS SHALL BE ATTACHED (IF>2 ACRES IMPERVIOUS, PLANS SHALL BE STAMPED WITH THE DERM/ WATER CONTROL SECTION APPROVAL)

DERM/UC- SURFACE WATER MANAGEMENT STORMWATER PERMIT (COPY ATTACHED) N/A

SFWMD- ENVIRONMENTAL RESOURCES PERMIT (COPY ATTACHED) N/A

TOTAL IMPERVIOUS AREA: 1.51 ACRES UNDERGROUND PARKING: YES (NO) (CIRCLE ONE)
* IF YES, FLOODPROOFING PLANS AND CERTIFICATE SHALL BE ATTACHED
BASEMENT: YES / (NO) (CIRCLE ONE)

HAVE THIS SITE OR OTHER PORTIONS OF THIS PROPERTY BEEN GRANTED A CLOMR OR FINAL LOMR? (CIRCLE ONE) LOMR#: _____ YES (NO)

	Lowest Floor Elevation (including basement/ sunken areas)	Adjacent Grade Elev. (next to the wall of the structure)	Lowest Catch Basin Elevation
PROPOSED	(+) 12.25 FT. NGVD	(+) 12.21 FT. NGVD	(+) 11.50 FT. NGVD

0' - 0" = (+) 13.08 FT. NGVD

ENGINEER'S CERTIFICATION

I HEREBY CERTIFY: That this plan was prepared under my direction and to the best of my knowledge and belief complies with the intent of the "MANUAL OF UNIFORM STANDARDS FOR DESIGN, CONSTRUCTION AND MAINTENANCE FOR STREETS, AND HIGHWAYS", as adopted by the State of Florida Legislature, Chapter 72-328 F.S.

PROGRESS SET

THESE PLANS ARE FOR BUILDING DEPARTMENT REVIEW ONLY. THEY ARE NOT TO BE CONSTRUED AS CONSTRUCTION DOCUMENTS UNTIL ALL BUILDING DEPARTMENT APPROVALS ARE OBTAINED.

BEHAR·FONT & PARTNERS, P.A.
ARCHITECTURE
PLANNING
INTERIORS
Certification No. AA0002451
4533 PONCE DE LEON BLVD.
Coral Gables, Florida 33146
TEL: (305) 740-5442
FAX: (305) 740-5443
E-MAIL: info@beharfont.com

© 2011 BEHAR FONT & PARTNERS P.A. THE DESIGN AND DRAWINGS FOR THIS PROJECT ARE THE PROPERTY OF THIS ARCHITECT AND ARE PROTECTED UNDER THE COPYRIGHT PROTECTION ACT.

SEAL:

Javier Font AR No. 12547

CONSULTANT:

Aviñó & ASSOCIATES
ENGINEERS • PLANNERS • SURVEYORS
2655 LEJEUNE ROAD, SUITE 1011
CORAL GABLES, FLORIDA 33134
TEL.: (305) 446-0900
FAX.: (305) 446-0907
E-MAIL: AVINO@AVINO.COM
WEB: WWW.AVINO.COM

Jorge R. Aviñó, PE No. 22207
Civil Engineer

CLIENT:

PROPOSED MIXED-USE BUILDING
MERRICK MANOR
4133 LE JEUNE ROAD
CORAL GABLES, FLORIDA

OWNER:

DATE:
12-07-2011

REVISIONS:

PROJECT No.
11-011

DRAWN BY:
BJS

CHECKED BY:
JRA

SCALE:
AS SHOWN

SHEET No.
C-1

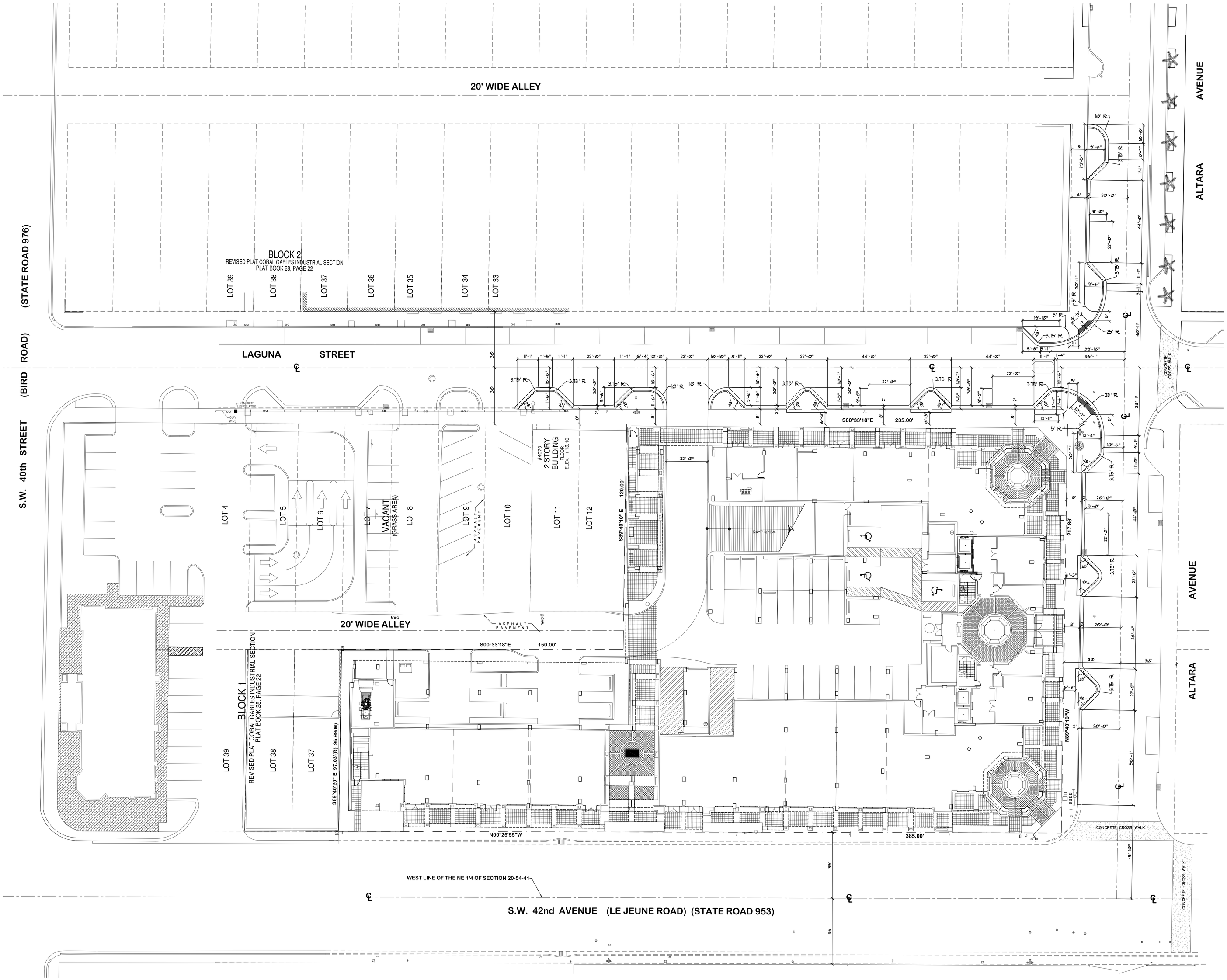

NOTES

1. FOR ALL BUILDING DIMENSIONS, SEE ARCHITECTURAL PLANS.
2. ALL PROPOSED CURB RADII ARE REFERENCED TO THE FACE OF CURB, UNLESS OTHERWISE NOTED.
3. FOR ALL DIMENSIONING OF PARKING AREA, ETC., SEE ARCHITECTURAL PLANS.
4. ALL EXISTING BOUNDARY AND TOPOGRAPHIC INFORMATION WERE TAKEN FROM THE SURVEY PREPARED BY LEITER, PEREZ & ASSOCIATES, INC., LAST DATED 01/28/2011, AND SUPPLIED TO US BY THE ARCHITECT.

NORTH

GEOMETRY PLAN

SCALE : 1" = 20'

PROGRESS SET

ENGINEER'S CERTIFICATION

I HEREBY CERTIFY: That this plan was prepared under my direction and to the best of my knowledge and belief complies with the intent of the "MANUAL OF UNIFORM STANDARDS FOR DESIGN, CONSTRUCTION AND MAINTENANCE FOR STREETS, AND HIGHWAYS", as adopted by the State of Florida Legislature, Chapter 72-328 F.S.

THESE PLANS ARE FOR BUILDING DEPARTMENT REVIEW ONLY. THEY ARE NOT TO BE CONSTRUED AS CONSTRUCTION DOCUMENTS UNTIL ALL BUILDING DEPARTMENT APPROVALS ARE OBTAINED.

BEHAR · FONT & PARTNERS, P.A.
ARCHITECTURE
PLANNING
INTERIORS
Certification No. AA0002451
4533 PONCE DE LEON BLVD.
Coral Gables, Florida 33146
TEL: (305) 740-5442
FAX: (305) 740-5443
E-MAIL: info@beharfont.com

© 2011 BEHAR FONT & PARTNERS P.A.
THE DESIGN AND DRAWINGS FOR ARCHITECTURE PROVIDED BY OFFICE OF THIS ARCHITECT AND ARE PROTECTED UNDER THE COPYRIGHT PROTECTION ACT.

SEAL :

Javier Font AR No. 12547

CONSULTANT :

Aviñó & ASSOCIATES
ENGINEERS • PLANNERS • SURVEYORS
4533 PONCE DE LEON BLVD. SUITE 500
CORAL GABLES, FLORIDA 33146
TEL: (305) 740-5440
FAX: (305) 740-5441
E-MAIL: info@avinoassociates.com
WEB: www.avinoassociates.com

Jorge R. Aviñó, PE No. 22207
Civil Engineer

CLIENT:

PROPOSED MIXED-USE BUILDING
MERRICK MANOR
4133 LE JEUNE ROAD
CORAL GABLES, FLORIDA

OWNER :

DATE:
12-07-2011

REVISIONS:

811 KNOW WHAT'S BELOW ALWAYS CALL 811 BEFORE YOU DIG
It's Need. It's Clean. It's the Law.
www.callsunshine.com

PROJECT No.
11-011

DRAWN BY:
BJS

CHECKED BY:
JRA

SCALE:
AS SHOWN

SHEET No.
C-2
2 OF 6

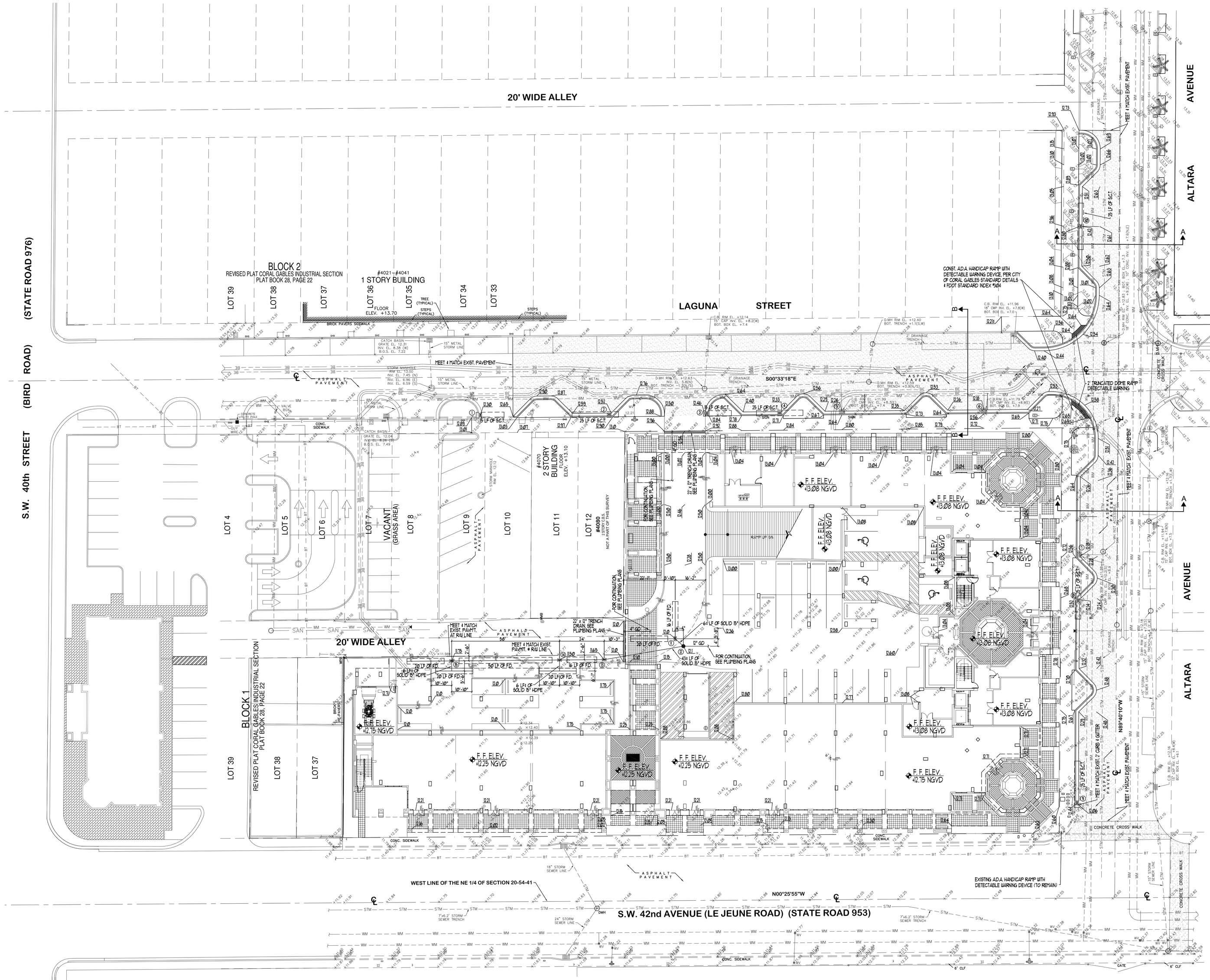

NORTH

PAVING & DRAINAGE PLAN

SCALE : 1" = 20'

PROGRESS SET

DRAINAGE STRUCTURE SCHEDULE

STRUCT. NUMBER	RIM ELEV.	PIPE INVERT ELEV.				BOTTOM ELEV.	DRAINAGE SYSTEM
		N	S	E	W		
1 *	12.30					2.0	S.C.T.
2 *	12.52					2.0	S.C.T.
3 *	12.46					2.0	S.C.T.
4 *	12.33					2.0	S.C.T.
5 **	12.26					EXIST.	EXIST.
6 **	12.18					EXIST.	EXIST.
7 **	12.18					EXIST.	EXIST.
8 *	12.20					2.0	S.C.T.
9 *	12.06					2.0	S.C.T.
10 *	12.42					2.0	S.C.T.
11 ***	12.00	5.50	5.50	5.50		2.00	F.D.
12 ****	12.10	5.50	7.50	5.50		3.50	F.D.
13 ***	11.65	5.50	5.50			2.00	F.D.
14 ***	11.50	5.50	5.50		5.50	2.00	F.D.
15 ***	11.75	5.50	5.50		5.50	2.00	F.D.

* TYPE "N" FRAME & GRATE
** EXIST. DRAINAGE STRUCTURE RIM ELEVATION TO BE ADJUSTED ACCORDINGLY.
*** TYPE "P" STRUCTURE WITH SUMP AND TYPE "D" FRAME & GRATE WITH BAFFLES REQUIRED.
**** TYPE "P" STRUCTURE WITH SUMP AND MANHOLE FRAME & GRATE

NOTES

1. FOR ALL BUILDING DIMENSIONING, SEE ARCHITECTURAL PLANS.
2. ALL PROPOSED ELEVATIONS ARE REFERENCED TO THE EDGE OF PAVEMENT, UNLESS OTHERWISE NOTED.
3. FOR ALL DIMENSIONING OF PARKING AREA, ETC., SEE ARCHITECTURAL PLANS.
4. ALL EXISTING BOUNDARY AND TOPOGRAPHIC INFORMATION WERE TAKEN FROM THE SURVEY PREPARED BY LEITER, PEREZ & ASSOCIATES, INC., LAST DATED 01/28/2011, AND SUPPLIED TO US BY THE ARCHITECT.

SITE DATA

FLOOD ZONE FIRM MAP PANEL No. = 12086C0457L
ZONE "X" - BASE FLOOD ELEVATION = N/A
WATER TABLE ELEVATION OCT. H.W. = (+) 2.7 NGVD
FLOOD CRITERIA ELEVATION = (+) 6.5 NGVD

LEGEND

11.75	PROPOSED ELEVATION
+13.25	EXISTING ELEVATION
	DIRECTION OF FLOW
1	PROPOSED STRUCTURE NUMBER
	PROPOSED CATCH BASIN
15 LF OF S.C.T.	PROPOSED SLAB COVERED TRENCH (3' WIDE), PER CITY OF CORAL GABLES STANDARD DETAIL I-1, BOTTOM TRENCH ELEV. @ = 2.0 NGVD
S.C.T.	PROPOSED SLAB COVERED TRENCH SYSTEM (3' WIDE)
F.D.	PROPOSED FRENCH DRAIN SYSTEM (3' WIDE)
25 LF OF F.D.	PROPOSED FRENCH DRAIN (3' WIDE)
F. F. ELEV.	PROPOSED FINISH FLOOR ELEVATION

ENGINEER'S CERTIFICATION

I HEREBY CERTIFY: That this plan was prepared under my direction and to the best of my knowledge and belief complies with the intent of the "MANUAL OF UNIFORM STANDARDS FOR DESIGN, CONSTRUCTION AND MAINTENANCE FOR STREETS, AND HIGHWAYS", as adopted by the State of Florida Legislature, Chapter 72-328 F.S.

THESE PLANS ARE FOR BUILDING DEPARTMENT REVIEW ONLY. THEY ARE NOT TO BE CONSTRUED AS CONSTRUCTION DOCUMENTS UNTIL ALL BUILDING DEPARTMENT APPROVALS ARE OBTAINED.

BEHAR · FONT & PARTNERS, P.A.
ARCHITECTURE
PLANNING
INTERIORS
Certification No. AA0002451
4533 PONCE DE LEON BLVD.
Coral Gables, Florida 33146
TEL: (305) 740-5442
FAX: (305) 740-5443
E-MAIL: info@beharfont.com

© 2011 BEHAR FONT & PARTNERS P.A. THE DESIGN AND DRAWINGS FOR THIS PROJECT ARE THE PROPERTY OF THIS ARCHITECT AND ARE PROTECTED UNDER THE COPYRIGHT PROTECTION ACT.

SEAL :

Javier Font AR No. 12547

CONSULTANT :

Aviñó & ASSOCIATES
ENGINEERS • PLANNERS • SURVEYORS
2655 LEJEUNE ROAD, SUITE 1011
CORAL GABLES, FLORIDA 33134
TEL: (305) 446-0900
FAX: (305) 446-9670
E-MAIL: info@avinoassociates.com
WEB: www.avinoassociates.com

Jorge R. Aviñó, PE No. 22207
Civil Engineer

CLIENT :

PROPOSED MIXED-USE BUILDING
MERRICK MANOR
4133 LE JEUNE ROAD
CORAL GABLES, FLORIDA

OWNER :

DATE:
12-07-2011

REVISIONS:

811 KNOW WHAT'S BELOW ALWAYS CALL 811 BEFORE YOU DIG
(Tu Vida Vale, Llámanos 48 h. Antes Que Cave)
www.callsunshine.com

PROJECT No.
11-011

DRAWN BY:
BJS

CHECKED BY:
JRA

SCALE:
AS SHOWN

SHEET No.
C-3
3 OF 6

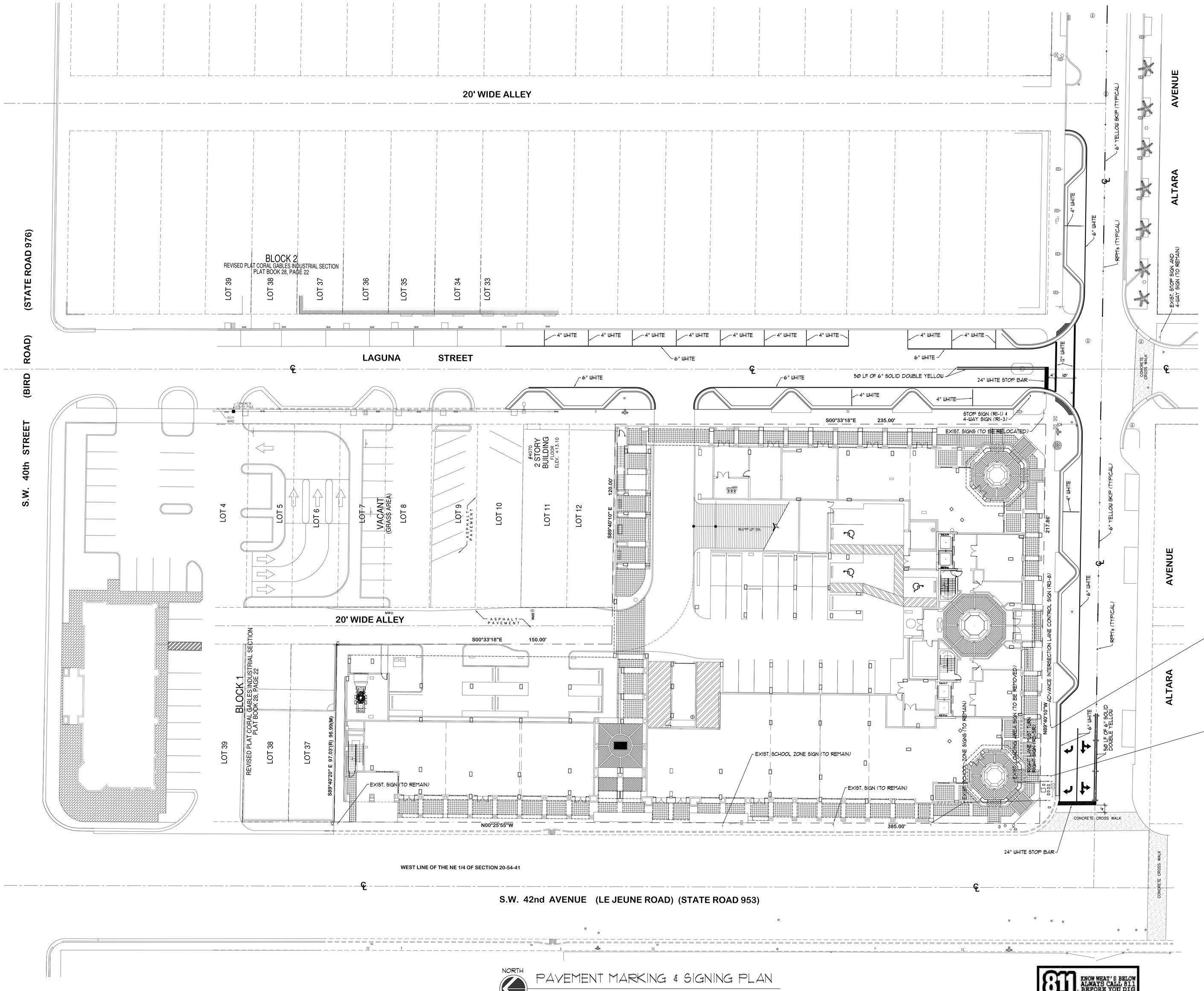

TRAFFIC NOTES & STANDARDS

1. Engineer shall visit site and verify field conditions before preparing proposed signing and pavement markings plans.
2. Contractor shall be responsible for the removal of all pavement markings and signs conflicting with the proposed construction.
3. Contractor shall be responsible for the installation of all pavement markings and signs as shown in the plans and applicable traffic design standards.
4. Contractor shall be responsible for matching existing pavement markings at the project.
5. Sign assembly locations shown in the plans which are in conflict with street lighting, utilities, driveways, pedestrian ramps, etc., may be adjusted as directed by the Engineer/Inspector.

NORTH

PAVEMENT MARKING & SIGNING PLAN

SCALE : 1" = 20'

PROGRESS SET

811 KNOW WHAT'S BELOW ALWAYS CALL 811 BEFORE YOU DIG
It's the Law! It's Common Sense. It's the Right Thing To Do.
www.callsunshine.com

ENGINEER'S CERTIFICATION

I HEREBY CERTIFY: That this plan was prepared under my direction and to the best of my knowledge and belief complies with the intent of the "MANUAL OF UNIFORM STANDARDS FOR DESIGN, CONSTRUCTION AND MAINTENANCE FOR STREETS, AND HIGHWAYS", as adopted by the State of Florida Legislature, Chapter 72-328 F.S.

THESE PLANS ARE FOR BUILDING DEPARTMENT REVIEW ONLY. THEY ARE NOT TO BE CONSTRUED AS CONSTRUCTION DOCUMENTS UNTIL ALL BUILDING DEPARTMENT APPROVALS ARE OBTAINED.

BEHAR·FONT & PARTNERS, P.A.
ARCHITECTURE
PLANNING
INTERIORS
Certification No. AA0002451
4533 PONCE DE LEON BLVD.
Coral Gables, Florida 33146
TEL: (305) 740-5442
FAX: (305) 740-5443
E-MAIL: info@beharfont.com

© 2011 BEHAR FONT & PARTNERS P.A. THE DESIGN AND DRAWINGS FOR THIS PROJECT ARE THE PROPERTY OF THIS ARCHITECT AND ARE PROTECTED UNDER THE COPYRIGHT PROTECTION ACT.

SEAL :

Javier Font AR No. 12547

CONSULTANT :

Aviñó & ASSOCIATES
ENGINEERING • PLANNING • SURVEYING
2655 LEJEUNE ROAD, SUITE 1010, CORAL GABLES
HOBY PLAZA, PLOR 8A, SUITE 8-A
TEL: (305) 446-0900
FAX: (305) 446-0907
EM: C. ROCA : JJR @ AVINO.COM
EM: J. AVIÑÓ : JRA @ AVINO.COM
EM: J. FONTA : JJR @ AVINO.COM

Jorge R. Aviñó, PE No. 22207
Civil Engineer

CLIENT:

OWNER:

DATE:
12-07-2011

REVISIONS:

PROJECT No.
11-011

DRAWN BY:
BJS

CHECKED BY:
JRA

SCALE:
AS SHOWN

SHEET No.
C-4
4 OF 6

PROPOSED MIXED-USE BUILDING
MERRICK MANOR
4133 LE JEUNE ROAD
CORAL GABLES, FLORIDA

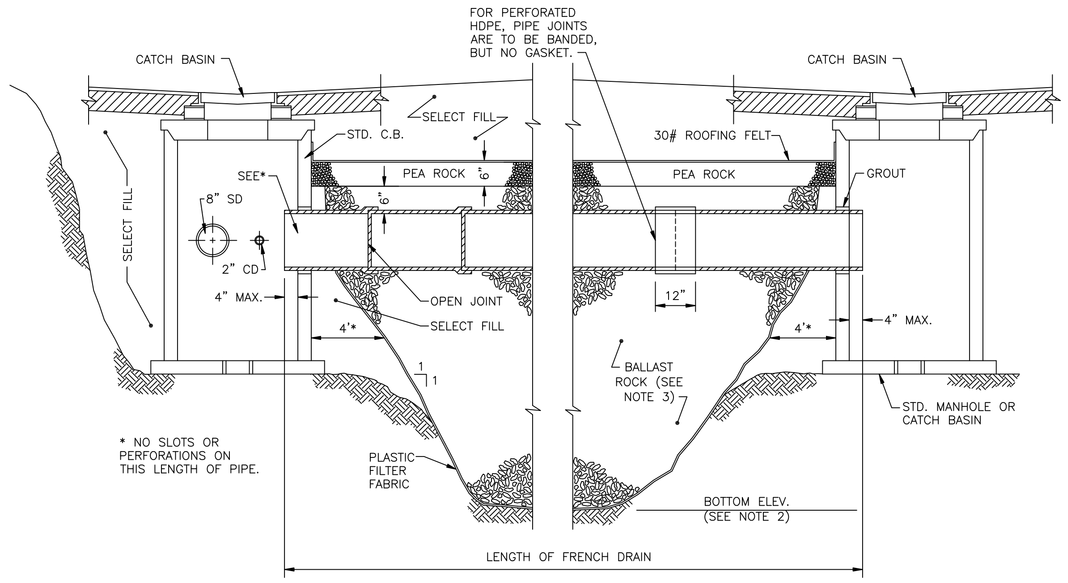

LONGITUDINAL SECTION

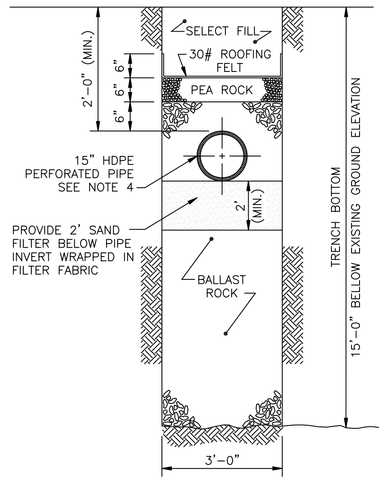

TRANSVERSE SECTION

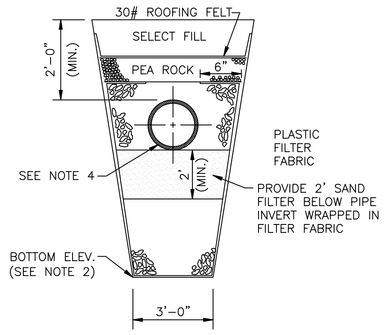

ALTERNATE TRANSVERSE SECTION

MAY BE USED IN AREAS WHERE TRENCH WALLS WILL NOT STAND VERTICAL, OR WHERE CAVE IN BELOW THE WATER TABLE IS LIKELY TO OCCUR. TO BE USED AT THE ENGINEER'S DISCRETION.

NOTES:

1. PLASTIC FILTER FABRIC (AT EACH SIDE, TOP AND BOTTOM) SHALL BE USED IN SANDY AREAS AS NOTED ON PLANS AND/OR AS DIRECTED BY THE ENGINEER.
2. THE BOTTOM OF THE EXFILTRATION TRENCH SHALL BE 15'-0" BELOW EXISTING GROUND ELEVATION, UNLESS FIELD CONDITIONS WARRANT OTHERWISE.
3. AFTER THE BALLAST ROCK HAS BEEN PLACED TO THE PROPER ELEVATION, IT SHALL BE CAREFULLY WASHED DOWN WITH CLEAN WATER IN ORDER TO ALLOW FOR INITIAL SETTLEMENT THAT MAY OCCUR. IF IT DOES TAKE PLACE, ADDITIONAL BALLAST ROCK WILL BE ADDED TO RESTORE THE BALLAST ROCK TO THE PROPER ELEVATION SO THAT THE EXFILTRATION TRENCH WILL BE COMPLETED IN ACCORDANCE WITH THE DETAILS.
4. FOR INVERT ELEVATIONS, SEE SHEET C-3.
5. SEE SHEET 2 OF 3 OF SD 1.1 IN THE MIAMI-DADE COUNTY PUBLIC WORKS MANUAL. ALSO, ALL PIPES SHALL BE 15" HDPE UNLESS OTHERWISE NOTED.

EXFILTRATION TRENCH DETAIL

NOT TO SCALE

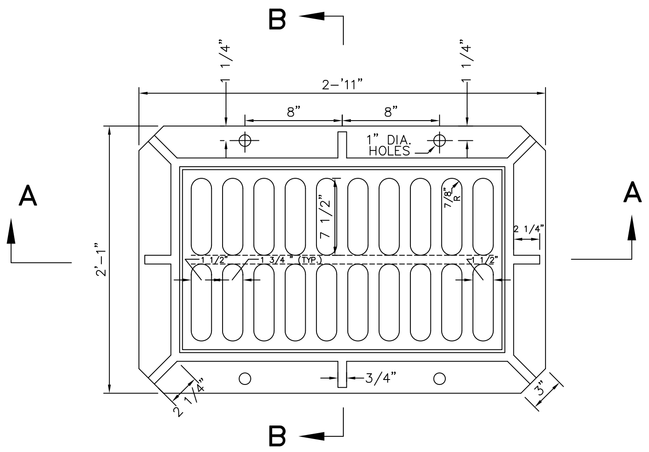

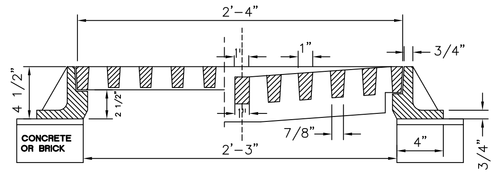

SECTION A-A

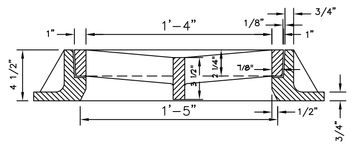

SECTION B-B

MIN. WEIGHTS
GRATE: 153 LBS.
FRAME: 215 LBS.

CATCH BASIN FRAME & GRATE

NOT TO SCALE

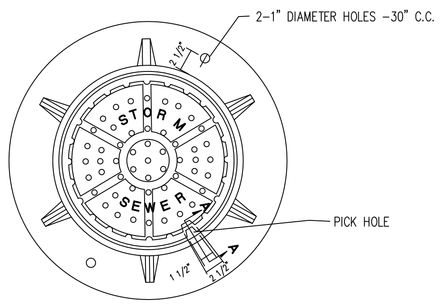

PLAN

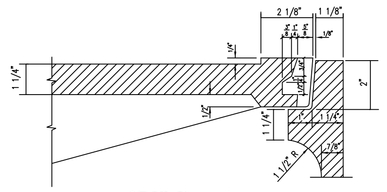

SECTION A-A

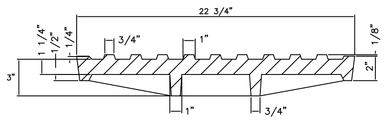

COVER SECTION

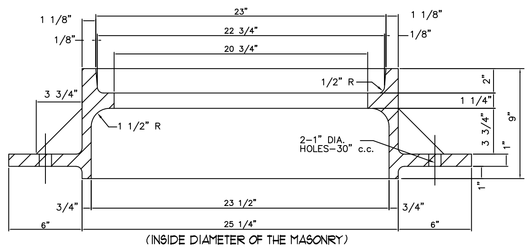

FRAME SECTION

ACCESS MANHOLE FRAME AND COVER

NOT TO SCALE

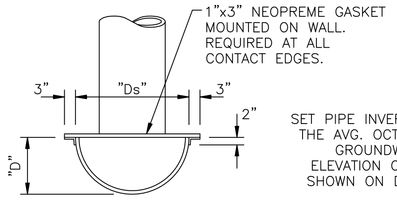

PLAN

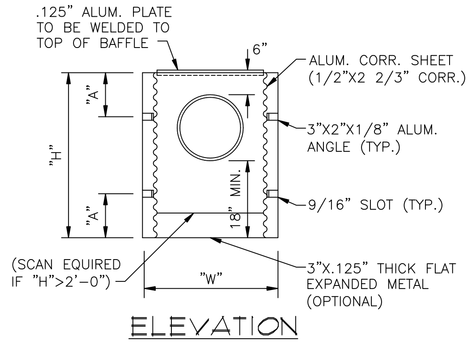

ELEVATION

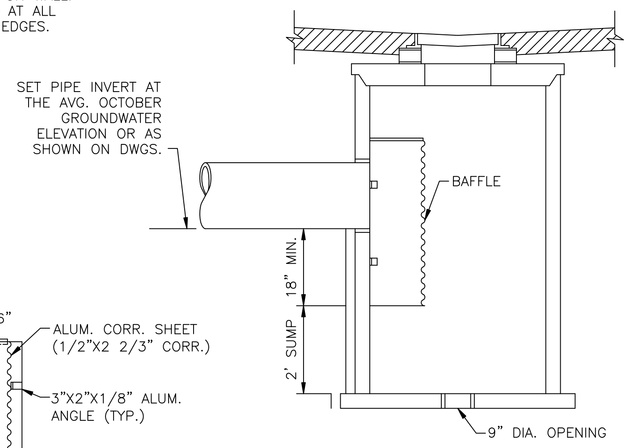

SECTION

DADE COUNTY STANDARD DEBRIS/POLLUTION RETARDANT BAFFLES							
PIPE DIAMETER	BAFFLE DIAMETER	GAUGE	HEIGHT	WIDTH	DEPTH	EAR DIAMETER	PERCENT OF PIPE
	(Ds)		(H)	(W)	(D)	(A)	AREA
15"	21"	16	42"	28"	11.0"	11"	97.1%
18"	30"	16	45"	37"	15.5"	12"	137.1%

BAFFLE DETAIL

NOT TO SCALE

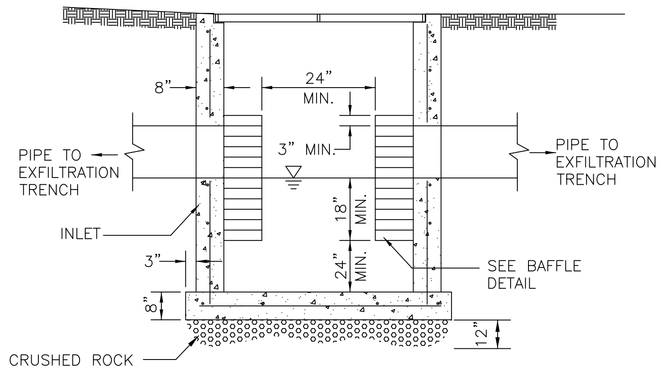

TYPICAL INLET DETAIL WITH EXFILTRATION TRENCH BOTH SIDES

NOT TO SCALE

GENERAL NOTES

1. CIRCULAR STRUCTURES (Alternate 'A') MAY BE CONSTRUCTED OF CONCRETE OR BRICK, BUT RECTANGULAR STRUCTURES (Alternate 'B') SHALL BE CONSTRUCTED OF CONCRETE ONLY. THE CONCRETE MAY BE CAST-IN-PLACE OR PRECAST.

2. WALL REINFORCEMENT AND THICKNESS ARE FOR EITHER CAST-IN-PLACE OR PRECAST CONCRETE EXCEPT THAT FOR PRECAST CIRCULAR UNITS ASTM Specification C-76, Table III, FOR B WALL REINFORCED CONCRETE PIPE OR PRECAST CIRCULAR UNITS IN ACCORDANCE WITH ASTM Specification C-478 WILL BE ACCEPTABLE. TOP AND FLOOR SLAB THICKNESS AND REINFORCEMENT ARE FOR ALL TYPES OF CONSTRUCTION.

3. PRECAST TOP AND/OR FLOOR SLABS MAY BE OF THE SAME CONCRETE AS SPECIFIED IN ASTM Specifications C-478 FOR PRECAST CIRCULAR UNITS.

4. SMOOTH FLOW CHANNELS COMPOSED OF CONCRETE, OR BRICK AND MORTAR, SHALL BE CONSTRUCTED IN THE BOTTOMS OF ALL STRUCTURES TO A DEPTH EQUAL TO HALF THE DIAMETER OF THE LARGEST PIPE.

5. CORNER FILLETS SHOWN FOR RECTANGULAR STRUCTURES ARE NECESSARY ONLY WHEN STRUCTURES ARE USED IN CONJUNCTION WITH CIRCULAR TOPS.

6. STRUCTURES SHALL BE SECURED TO INLET THROATS, RISERS OR MANHOLE TOPS WITH A MINIMUM OF 6-No. 4 BARS 12" LONG.

7. ANY INLET, MANHOLE OR JUNCTION BOX MAY BE USED IN CONJUNCTION WITH ANY INLET THROAT OR MANHOLE TOP.

8. MORTAR USED TO SEAL THE PIPE IN THE WALLS OT THE PRECAST UNITS SHALL BE OF SUCH A MIX THAT SHRINKAGE WILL NOT CAUSE LEAKAGE INTO OR OUT OF THE UNITS. MAXIMUM OPENING FOR PIPE SHALL BE MAX. REQUIRED O.D. + 6".

9. BRICK MASONRY CONSTRUCTION SHALL BE PLASTERED WITH 1/2" THICK MORTAR INSIDE AND OUTSIDE.

10. CONCRETE PROTECTION FOR REINFORCEMENT IN CAST-IN-PLACE OR PRECAST CONCRETE SHALL BE IN ACCORDANCE WITH CHAPTER 7, "BUILDING CODE REQUIREMENTS FOR REINFORCED CONCRETE (ACI 318-71)"

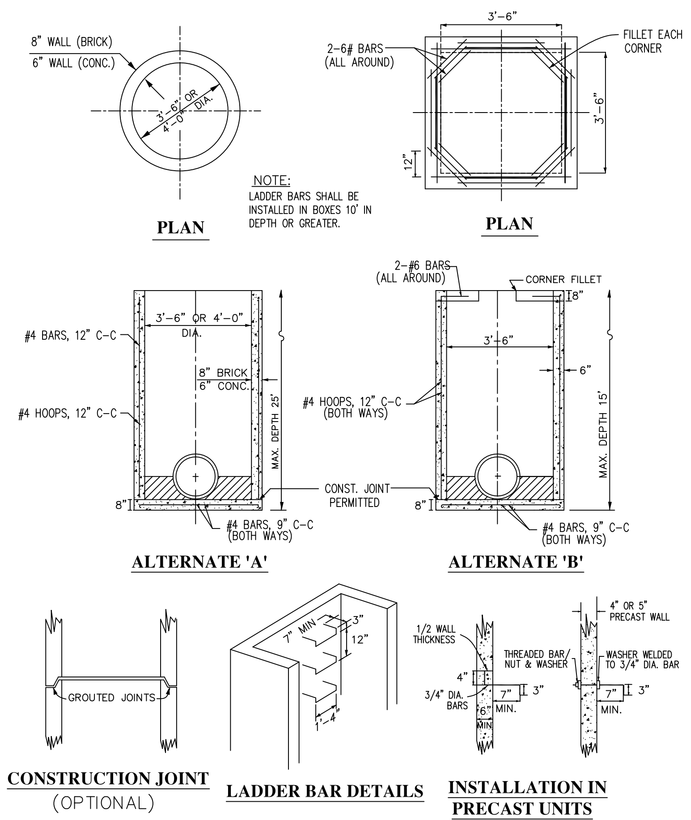

INLET, MANHOLE, AND JUNCTION BOX (TYPE P)

NOT TO SCALE

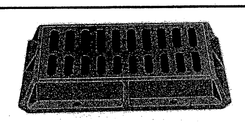

CONCAVE GRATE, USF 4105-6224

GRATE NUMBER	LOAD RATING	FLOW AREA	GRATE WEIGHT	TOTAL WEIGHT
6220	HEAVY DUTY	210	155	365
6224	HEAVY DUTY	220	150	380
6225	HEAVY DUTY	195	155	350

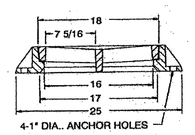

NO SCALE

U.S. FOUNDRY & MFG. CORP. DRAWING NO. 4105-6224 OR APPROVED EQUAL.

APPROVED 03/23/01	DEPT. of PUBLIC WORKS ENGINEERING DIVISION CITY of CORAL GABLES	STANDARD DETAIL TYPE "D" FRAME & GRATE	1-8

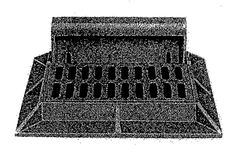

USF 5115 - 6220

GRATE NUMBER	LOAD RATING	FLOW AREA	GRATE WEIGHT	TOTAL WEIGHT
6220	HEAVY DUTY	210	155	520
6224	HEAVY DUTY	215	150	525
6225	HEAVY DUTY	190	155	570

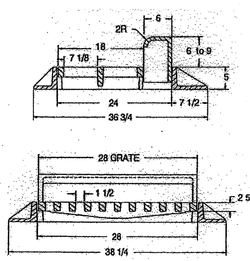

NO SCALE

U.S. FOUNDRY & MFG. CORP. DRAWING NO. 5115-6220 OR APPROVED EQUAL.

APPROVED 03/23/01	DEPT. of PUBLIC WORKS ENGINEERING DIVISION CITY of CORAL GABLES	STANDARD DETAIL TYPE "N" FRAME & GRATE	1-9

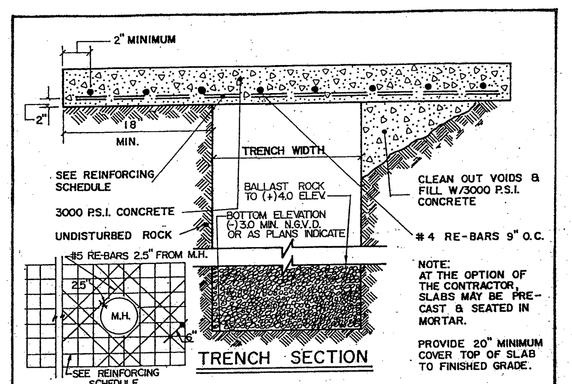

TRENCH PLAN

REINFORCING SCHEDULE

TRENCH WIDTH	SLAB THICKNESS	ROD SPACING #4	#5	#6	#7	#8
2'	6"	6"	7"	10"	12"	12"
3'	7"	—	6"	7"	10"	12"
4'	8"	—	—	6"	8"	10"
*	8"	—	—	5"	—	—

NOTES:

1. TRENCH DEPTH SHALL BE MEASURED FROM BOTTOM OF SLAB.
2. ALL VOIDS IN TRENCH WALLS SHALL BE FILLED W/3000 P.S.I. CONCRETE.
3. MANHOLE SHALL BE SET IN SLAB. DIAGONAL STEEL SHALL BE PLACED AT OPENING IN SLAB.
4. TOP OF TRENCH SLAB SHALL BE A MINIMUM OF 20" BELOW FINISHED GRADE.
5. CLEAN SLAB SHOULDER TO BARE ROCK BEFORE POURING SLAB.
6. TYPE "C" MANHOLE FRAME & COVER TO BE PROVIDED FOR EVERY 50' OF CONTINUOUS TRENCH. SET ACCORDING TO CASTING ADJUSTMENT (8" BRICK OR CONCRETE WALL) OR AS APPROVED BY ENGINEER.
7. * IF COVER IS LESS THAN 20".
8. ALL STEEL f_y = 60,000 P.S.I.

APPROVED A.E.L. REVISED 10/25/82 10/1/80 1/81 2/90	DEPT. of PUBLIC WORKS ENGINEERING DIVISION CITY of CORAL GABLES	STANDARD DETAIL DRAINAGE TRENCH NO SCALE	1-1'

PROGRESS SET

THESE PLANS ARE FOR BUILDING DEPARTMENT REVIEW ONLY. THEY ARE NOT TO BE CONSTRUED AS CONSTRUCTION DOCUMENTS UNTIL ALL BUILDING DEPARTMENT APPROVALS ARE OBTAINED.

BEHAR, FONT & PARTNERS, P.A.
ARCHITECTURE
PLANNING
INTERIORS
Certification No. AA0002451
4533 PONCE DE LEON BLVD.
Coral Gables, Florida 33146
TEL: (305) 740-5442
FAX: (305) 740-5443
E-MAIL: info@beharfont.com

© 2011 BEHAR FONT & PARTNERS P.A. THE DESIGN AND DRAWINGS FOR THIS PROJECT ARE THE PROPERTY OF THIS ARCHITECT AND ARE PROTECTED UNDER THE COPYRIGHT PROTECTION ACT.

SEAL:
Javier Font AR No. 12547
CONSULTANT:
Aviñó & ASSOCIATES
ENGINEERING • PLANNING • SURVEYING
2655 LEJEUNE ROAD, SUITE 1010, CORAL GABLES, FLORIDA 33134
PHONE: (305) 446-1360
FAX: (305) 446-9169
E-MAIL: avino@avinoassociates.com
WEB: www.avinoassociates.com
Jorge R. Aviñó, PE No. 22207
Civil Engineer
CLIENT:

PROPOSED MIXED-USE BUILDING
MERRICK MANOR
4133 LE JEUNE ROAD
CORAL GABLES, FLORIDA

OWNER:

DATE: 12-07-2011
REVISIONS:

PROJECT No. 11-011
DRAWN BY: BJS
CHECKED BY: JRA
SCALE: AS SHOWN
SHEET No. C-5
5 OF 6

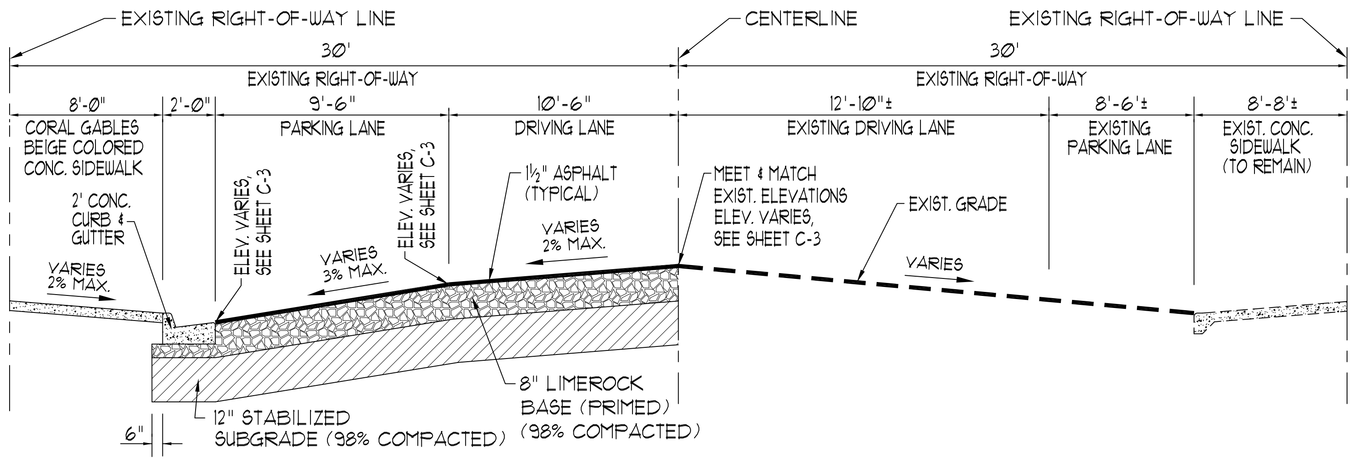

A TYPICAL SECTION

NOT TO SCALE

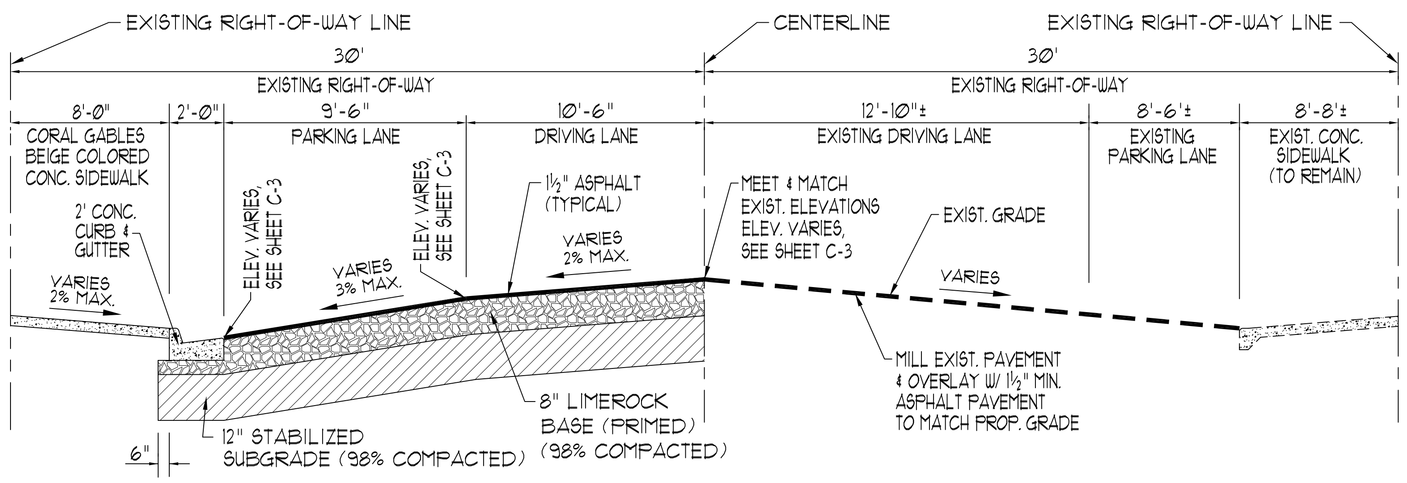

B TYPICAL SECTION

NOT TO SCALE

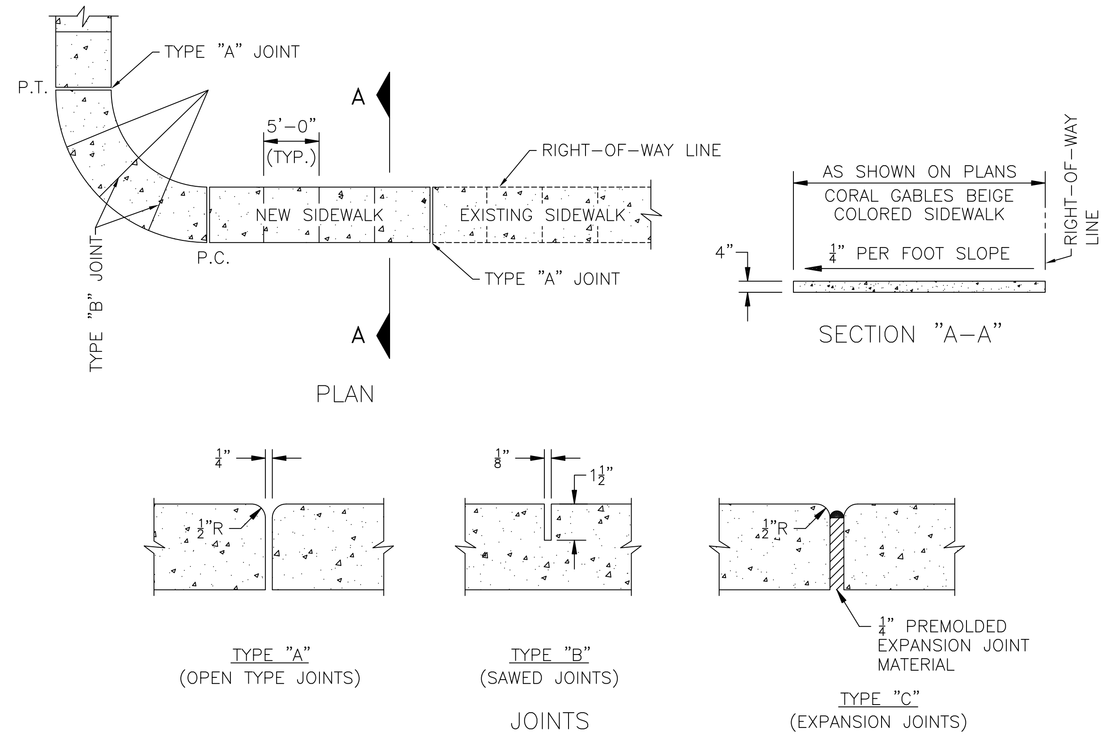

TABLE OF SIDEWALK JOINTS	
TYPE	LOCATIONS
"A"	AND P.T. OF CURVES. JUNCTION OF EXISTING AND NEW SIDEWALKS
"B"	5'-0" CENTER TO CENTER ON SIDEWALKS
"C"	*WHERE SIDEWALK ABUTS CONCRETE CURBS, DRIVEWAYS, AND SIMILAR STRUCTURES

TABLE OF SIDEWALK THICKNESS – "T"	
LOCATIONS	"T"
NON-VEHICULAR AREAS	4"
DRIVEWAYS	6"

NOTES:

1. ALL WORK SHALL COMMPLY WITH CITY OF CORAL GABLES STANDARD SPECIFICATIONS OF CONCRETE SIDEWALKS AND CURBS.
2. SUBGRADE COMPACTED TO 95% DENSITY AASHTO T-99.

SIDEWALK CONSTRUCTION DETAIL

N.T.S.

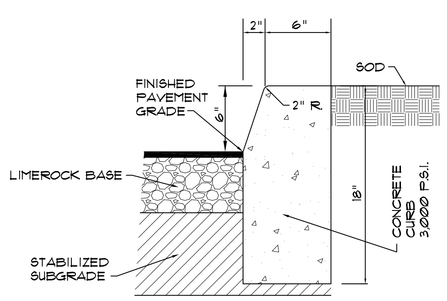

6" CURB (TYPE "D")

NOT TO SCALE

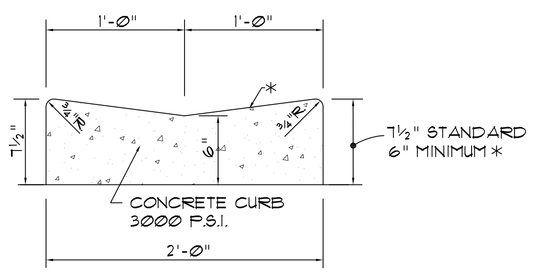

2' CONCRETE VALLEY GUTTER

NOT TO SCALE

* When used on high side of roadways, the cross slope of the gutter shall match the cross slope of the adjacent pavement. The thickness of the lip shall be 6", unless otherwise shown on plans.

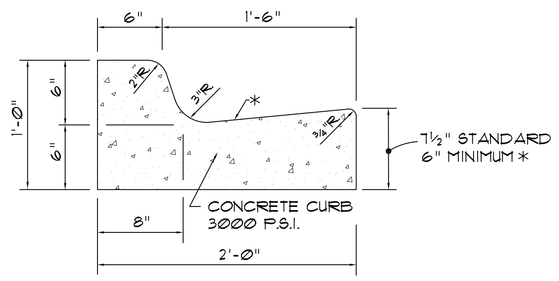

24" CURB and GUTTER

NOT TO SCALE

* When used on high side of roadways, the cross slope of the gutter shall match the cross slope of the adjacent pavement. The thickness of the lip shall be 6", unless otherwise shown on plans.

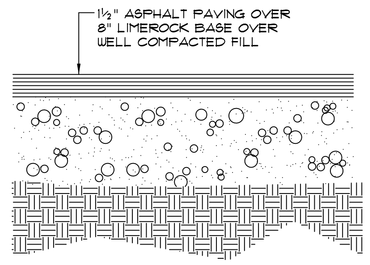

TYPICAL PAVEMENT DETAIL

NOT TO SCALE

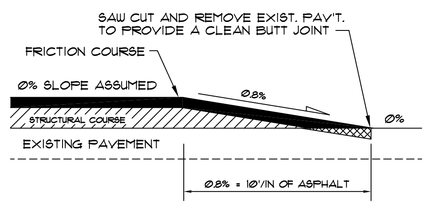

FEATHERING DETAIL

NOT TO SCALE

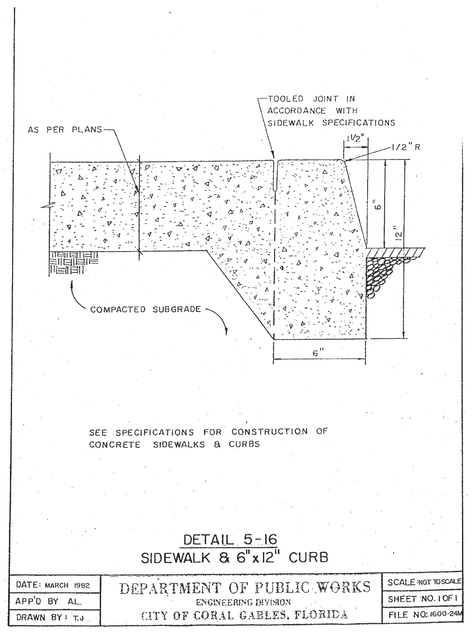

PROGRESS SET

THESE PLANS ARE FOR BUILDING DEPARTMENT REVIEW ONLY. THEY ARE NOT TO BE CONSTRUED AS CONSTRUCTION DOCUMENTS UNTIL ALL BUILDING DEPARTMENT APPROVALS ARE OBTAINED.

BEHAR·FONT & PARTNERS, P.A.
ARCHITECTURE
PLANNING
INTERIORS
Certification No. AA0002451
4533 PONCE DE LEON BLVD.,
Coral Gables, Florida 33146
TEL: (305) 740-5442
FAX: (305) 740-5443
E-MAIL: info@beharfont.com

© 2011 BEHAR FONT & PARTNERS P.A. THE DESIGN AND DRAWINGS FOR THIS PROJECT ARE THE PROPERTY OF THIS ARCHITECT AND ARE PROTECTED UNDER THE COPYRIGHT PROTECTION ACT.

SEAL:

Javier Font AR No. 12547

CONSULTANT:

Aviñó & ASSOCIATES

Jorge R. Aviñó, PE No. 22207
Civil Engineer

CLIENT:

PROPOSED MIXED-USE BUILDING
MERRICK MANOR
4133 LE JEUNE ROAD
CORAL GABLES, FLORIDA

OWNER:

DATE:
12-07-2011

REVISIONS:

PROJECT No.
11-011

DRAWN BY:
BJS

CHECKED BY:
JRA

SCALE:
AS SHOWN

SHEET No.
C-6
6 OF 6

INDEX OF SHEETS

WS-1	COVER SHEET
WS-2	WATER AND SEWER PLAN
WS-3	WATER AND SEWER PROFILES

DEMOLITION NOTES:

(NOT A PART OF M-DWASD NOTES NOR APPROVAL)

1.- UNLESS OTHERWISE NOTED, ALL EXISTING IMPROVEMENTS WITHIN THE LIMITS OF WORK SHALL BE REMOVED IN THEIR ENTIRETY.
2.- ASPHALT PAVEMENT DESIGNATED FOR DEMOLITION SHALL BE REMOVED AND DISPOSED OF OFF-SITE AT AN APPROVED LOCATION. SAWCUT ALL PAVEMENT EDGES WHERE EXISTING PAVEMENT IS TO REMAIN.
3.- IN GREEN AREAS, EXISTING LIMEROCK SUBBASE SHALL BE SCARIFIED TO ITS FULL DEPTH AND SHAPED TO THE LINES AND GRADES SHOWN IN THESE DRAWINGS.
4.- ALL EXISTING DRAINAGE IMPROVEMENTS WITHIN THE LIMITS OF WORK, IF ANY, SHALL BE REMOVED, INCLUDING STRUCTURES, PIPES, AND FRENCH DRAINS.

WATER & SEWER INSTALLATION NOTES

(NOT A PART OF M-DWASD NOTES NOR APPROVAL)

1. A HORIZONTAL DISTANCE OF 10 FT. SHALL BE MAINTAINED BETWEEN WATER & SEWER MAINS. WHEN THE 10 FEET HORIZONTAL DISTANCE CRITERIA CANNOT BE MET DUE TO AN EXISTING UNDERGROUND FACILITY CONFLICT, THE SEWER SHALL BE CONSTRUCTED OF DUCTILE IRON PIPE WITH MECHANICAL JOINTS.

2. A VERTICAL DISTANCE OF AT LEAST 18 INCHES SHALL BE MAINTAINED BETWEEN ANY WATER AND SEWER MAINS. THE SEWER SHALL BE A DUCTILE IRON SINGLE 20 FEET LENGTH CENTERED ON THE CROSSING IF THE MINIMUM VERTICAL DISTANCE IS LESS THAN 18 INCHES OR THE SEWER IS INSTALLED ABOVE THE WATER MAIN (REGARDLESS OF SEPARATION).

3. IN HIGHLY CONGESTED AREAS, WHERE EITHER WATER OR SEWER FACILITIES ARE EXISTING AND THE SEPARATION REQUIREMENTS CANNOT BE MET, SPECIAL CONSIDERATION MAY BE GIVEN SUBJECT TO A COMPLETE EVALUATION OF EXISTING AND PROPOSED CONDITIONS.

4. THE MAXIMUM ALLOWABLE EXFILTRATION RATE OF GRAVITY SANITARY SEWERS CONSTRUCTED IN A PUBLIC WELLFIELD PROTECTION AREA SHALL BE FIFTY (50) GALLONS PER INCH PIPE DIAMETER PER MILE PER DAY FOR RESIDENTIAL LAND USE AND TWENTY (20) GALLONS PER INCH PIPE DIAMETER PER MILE PER DAY FOR NON-RESIDENTIAL LAND USE.

5. FORCE MAIN SEWERS CONSTRUCTED IN A PUBLIC WELLFIELD PROTECTION AREA SHALL BE EITHER DUCTILE IRON OR REINFORCED CONCRETE PRESSURE SEWER PIPE. THE DUCTILE IRON PIPE EXFILTRATION RATE SHALL NOT BE GREATER THAN THE ALLOWABLE LEAKAGE RATE SPECIFIED IN AMERICAN WATER WORKS ASSOCIATION STANDARD (AWWA) C600-82 AT A TEST PRESSURE OF 100 POUNDS PER SQUARE INCH. THE REINFORCED CONCRETE PRESSURE SANITARY SEWER FORCE MAIN EXFILTRATION RATE SHALL NOT BE GREATER THAN ONE HALF (1/2) THE ALLOWABLE LEAKAGE RATE SPECIFIED IN AWWA C600-82 AT A TEST PRESSURE OF 100 POUNDS PER SQUARE INCH.

6. THE CONTRACTOR SHALL VERIFY NATURE, DEPTH, AND CHARACTER OF EXISTING UNDERGROUND UTILITIES PRIOR TO START OF CONSTRUCTION.

7. ALL OTHER PUBLIC OR PRIVATE UTILITY FACILITIES SHALL BE CONSTRUCTED AT LEAST 3 FEET FROM ANY WATER AND SEWER MAIN AS MEASURED FROM THE OUTSIDE BELL OF THE WATER AND SEWER PIPE TO THE OUTSIDE OF THE UTILITY PIPE.

8. WHEN THE 3 FEET SEPARATION BETWEEN PROPOSED AND EXISTING LINE IS NOT POSSIBLE, THE CONTRACTOR SHALL HAND DIG OR EXPOSE THE WATER AND SEWER PIPES BEFORE PROCEEDING WITH POWER EQUIPMENT EXCAVATION.

9. IN NO CASE SHALL A CONTRACTOR INSTALL UTILITY PIPES, CONDUITS, CABLES, ETC., IN THE SAME TRENCH PARALLEL TO AND ABOVE EXISTING WATER AND SEWER PIPES EXCEPT WHERE THEY CROSS. ANY DEVIATION FROM NOTES 6, 7 AND 8 SHALL BE APPROVED IN WRITING BY THE RESPONSIBLE WATER AND SEWER UTILITY.

10. A NON-RESETTABLE ELAPSE TIME METER SHALL BE INSTALLED AT EACH PUMP TO RECORD THE TOTAL OPERATING HOURS OF THE STATION.

11. PAVEMENT RESTORATION SHALL BE IN ACCORDANCE WITH DADE COUNTY PUBLIC WORKS MANUAL STANDARD DETAIL No. R211.

THE FOLLOWING ARE REQUIREMENTS PER DEPARTMENT OF HEALTH

WATER MAIN CROSSING

(NOT A PART OF M-DWASD NOTES NOR APPROVAL)

WATER MAIN CROSSING ANY EXISTING OR PROPOSED GRAVITY VACUUM OR STORM SEWER SHALL BE 6" AND PREFERABLY 12" ABOVE THE SEWER. WATER MAINS BELOW SEWER AT CROSSING SHALL HAVE AT LEAST 12" SEPARATION.

PRESSURE TYPE SANITARY SEWER, WASTEWATER OR STORMWATER FORCE MAIN, OR RECLAIMED WATER LINES SHALL BE AT LEAST 12" ABOVE OR BELOW WATER MAIN.

NOTE: CENTER 1-FULL LENGTH OF WATER MAIN PIPE AT CROSSINGS.
ALTERNATIVELY ARRANGE PIPES SO JOINTS ARE AT LEAST 3 FEET FROM JOINTS IN VACUUM, STORM OR STORM FORCE MAINS, AT LEAST 6 FEET FROM JOINTS IN GRAVITY OR PRESSURE SEWERS, WASTEWATER FORCE MAINS OR RECLAIMED WATER.

SANITARY SEWER SYSTEM NOTES:

(NOT A PART OF M-DWASD NOTES NOR APPROVAL)

1.- SANITARY MANHOLES AND LIDS SHALL BE CAPABLE OF WITHSTANDING H-20 WHEEL LOAD. THE WORDS "SANITARY SEWER" SHALL BE CAST INTO ALL SANITARY MANHOLE LIDS.
2.- ALL GRAVITY SEWER PIPE SHALL BE PVC OR DUCTILE IRON. PVC PIPE SHALL CONFORM TO ASTM D-03034, SDR 35, LATEST REVISION, WITH MAXIMUM 13 FOOT LENGTHS AND PUSH-ON RUBBER GASKET JOINTS.
3.- THE MINIMUM DESIGN SLOPES FOR 8" GRAVITY SEWER PIPES SHALL BE @ 0.40%.
4.- THE CONTRACTOR SHALL TEST THE COMPLETED SEWER LINE TO DETERMINE ALIGNMENT AND TIGHTNESS OF THE JOINTS. TESTING SHALL BE LAMPED AND MUST SHOW A FULL CIRCLE OF LIGHT. INFILTRATION AND EXFILTRATION TESTING SHALL BE CONDUCTED.
5.- CLEAN OUTS SHALL BE INSTALLED AT MAXIMUM 75 FOOT INTERVALS ON ALL SEWER SERVICES EXCEEDING 75 FEET IN LENGTH.
6.- DUCTILE IRON PIPE SHALL CONFORM TO THE REQUIREMENTS OF ANSI/AWWA C151/A21.51-86 AND SHALL BE ASPHALT COATED OUTSIDE PER ANSI/AWWA C104/A21.4-90.
7.- ALL DUCTILE IRON PIPE (DIP) SHALL BE INSTALLED WITH A MINIMUM CLEAR COVER OF 36 INCHES.
8.- INSTALLATION AND TESTING OF MAINS SHALL BE DONE IN ACCORDANCE WITH MIAMI-DADE COUNTY WATER AND SEWER DEPARTMENT STANDARDS AND SPECIFICATIONS.
9.- CONNECTING TO THE EXISTING SYSTEM: ALL CONNECTIONS TO EXISTING MAINS SHALL BE MADE UNDER THE DIRECTION OF THE ENGINEER AND MIAMI-DADE COUNTY WATER AND SEWER DEPARTMENT'S INSPECTOR.

NOTES:

1. ALL EXISTING UTILITIES BEING REMOVED AND/OR RELOCATED MUST REMAIN ACTIVE AND IN SERVICE, UNTIL SUCH TIME WHEN NEW REPLACING UTILITIES HAVE BEEN INSTALLED, IN SERVICE, ACCEPTED BY THE DEPARTMENT AND ALL RELATED SERVICES FROM THE EXISTING MAINS HAVE BEEN TRANSFERRED TO THE NEW ONES, BY M-DWASD FORCES AT OWNER'S EXPENSE AS APPLICABLE.

2. ALL WATER AND/OR SEWER FACILITIES LOCATED IN PRIVATE PROPERTY SHALL BE REMOVED AFTER ALL INSTALLED SERVICES FROM THEM HAVE BEEN TRANSFERRED TO THE ALREADY INSTALLED AND IN SERVICE NEW MAINS. ANY ASSOCIATED EXCLUSIVE EASEMENTS SHALL BE CLOSED AND VACATED PRIOR TO THE REMOVAL OF THE EXISTING WATER AND/OR SEWER FACILITIES.

UNDERGROUND DIGGING NOTE:

(NOT A PART OF M-DWASD NOTES NOR APPROVAL)

1. CONTRACTOR SHALL USE EXTREME CAUTION WHEN EXCAVATING.
2. CONTRACTOR SHALL REMAIN 2 FEET AWAY FROM THE LOCATED MARKS WITH THE MACHINERY. IF IT'S NECESSARY TO EXCAVATE WITHIN THE 2 FOOT TOLERANCE ZONE, CONTRACTOR MUST HAND DIG, SOFT DIG, OR USE NON-INVASIVE MEANS TO EXPOSE AND PROTECT THE EXISTING FACILITIES AS REQUIRED BY LAW.

GENERAL NOTES: (NOT A PART OF M-DWASD NOTES NOR APPROVAL)

1. VERTICAL CONTROL POINTS AND ALL ELEVATIONS ARE BASED ON 1929 NGVD DATUM.

2. THE CONTRACTOR SHALL CONFIRM ALL HORIZONTAL AND VERTICAL CONTROL POINTS PRIOR TO USE. THE CONTRACTOR SHALL CONFIRM ALIGNMENT AND ELEVATIONS OF ADJACENT WORK PRIOR TO BEGINNING CONSTRUCTION. ALL DISCREPANCIES SHALL BE IMMEDIATELY BROUGHT TO THE OWNER'S ATTENTION.

3. ALL EXISTING UTILITIES SHALL REMAIN IN SERVICE, UNLESS OTHERWISE NOTED.

4. USE EXTREME CAUTION NEAR ALL UTILITIES, CABLES, CONDUITS, AND MANHOLES. CONTRACTOR TO PROVIDE PROTECTION DURING CONSTRUCTION TO ASSURE SERVICE AT ALL TIMES. CONTRACTOR SHALL COORDINATE ALL SCHEDULES WITH FIELD REPRESENTATIVE PRIOR TO WORKING AROUND UTILITIES.

5. CONTRACTOR SHALL BE RESPONSIBLE FOR BECOMING FAMILIAR WITH CURRENT SITE CONDITIONS AND SHALL REPORT ANY DISCREPANCIES ON THE PLANS TO THE ENGINEER PRIOR TO COMMENCING WORK.

6. ALL CONSTRUCTION LAYOUT SHALL BE THE RESPONSIBILITY OF THE CONTRACTOR. THE CONTRACTOR SHALL BE RESPONSIBLE FOR ESTABLISHING THE WORK LIMIT LINES AS SHOWN ON THE PLANS AND SHALL WORK WITHIN THE LIMITS AND DIMENSIONS SHOWN. ALL PAVEMENT DIMENSIONS ARE TO THE EDGE OF PAVEMENT, ANY DEVIATION FROM THE PLANS SHALL REQUIRE WRITTEN APPROVAL FROM THE ENGINEER PRIOR TO EXECUTING WORK.

7. GRADING SHALL CONSIST OF ALL EXCAVATION, BACKFILLING, SHAPING AND SLOPING NECESSARY FOR THE CONSTRUCTION, PREPARATION AND COMPLETION OF ALL WORK AND OTHER AREAS, ALL IN ACCORDANCE WITH THE LAYOUT AND GRADES SHOWN ON THESE DRAWINGS. SAWCUT ALL PAVEMENT EDGES WHERE EXISTING PAVEMENT IS TO REMAIN.

8. CONTRACTOR SHALL BE RESPONSIBLE FOR PROTECTING AND RESTORING ALL ADJACENT IMPROVEMENTS. CONTRACTOR SHALL BE RESPONSIBLE FOR RESETTING ALL DISTURBED EXISTING MANHOLE COVERS, VALVE BOXES, BLOW-OFF RISERS, ETC. TO NEW ELEVATIONS, AS REQUIRED, WHETHER SPECIFICALLY SHOWN ON DRAWINGS OR NOT.

9. THE CONTRACTOR SHALL NOTIFY ALL UTILITY COMPANIES THAT MAY BE AFFECTED BY THE PROPOSED WORK, PRIOR TO THE START OF ANY CONSTRUCTION, TO ARRANGE FOR PHYSICAL LOCATION AND ELEVATION OF ALL UNDERGROUND IMPROVEMENTS. IT IS THE CONTRACTOR'S RESPONSIBILITY TO PROVIDE THE UTILITY COMPANY SUFFICIENT NOTICE TO SCHEDULE ANY RELOCATION OF THEIR UTILITIES. THE CONTRACTOR SHALL BE RESPONSIBLE FOR SUPPORT OF ANY UTILITY THAT MAY BE IN CONFLICT WITH OR ENDANGERED BY THE PROPOSED WORK.

10. ALL OVERHEAD OR SURFACE STRUCTURES AND UTILITIES ENCOUNTERED ARE TO BE CAREFULLY PROTECTED FROM DAMAGE OR DISPLACEMENT. ALL DAMAGE TO SUCH STRUCTURES SHALL BE COMPLETELY REPAIRED WITHIN THE TIME FRAME OF THE CONSTRUCTION. THE OWNER RESERVES THE RIGHT TO REMEDY SUCH DAMAGE BY ORDERING OUTSIDE PARTIES TO MAKE SUCH REPAIRS AT THE EXPENSE OF THE CONTRACTOR.

11. THE CONTRACTOR MAY STORE EQUIPMENT AND MATERIALS WITHIN THE LIMITS OF THE SITE. THE CONTRACTOR SHALL MAINTAIN THESE AREAS IN A CLEAN AND ORDERLY CONDITION SO AS NOT TO CAUSE A NUISANCE IN THE AREA. THE CONTRACTOR SHALL RESTORE THE STORAGE AREA TO ITS ORIGINAL OR BETTER CONDITION, WITH ALL ITS APPURTENANCES, IN KIND, TO THE SATISFACTION OF THE ENGINEER AND OWNER.

12. COMPLETE "AS-BUILT" INFORMATION RELATIVE TO LOCATION, SIZE AND DEPTH OF THE PROPOSED PIPES, STRUCTURES, AND OTHER IMPROVEMENTS SHALL BE ACCURATELY RECORDED. THIS INFORMATION SHALL BE SUBMITTED TO THE ENGINEER AS A CADD FILE AND AS A DRAWING SIGNED AND SEALED BY A PROFESSIONAL LAND SURVEYOR REGISTERED IN THE STATE OF FLORIDA AT THE CONTRACTOR'S EXPENSE.

13. THE UNDERGROUND UTILITIES SHOWN HEREON ARE BASED ON EXISTING UTILITY PLANS. NO SUBSURFACE VERIFICATION OF THE UTILITIES WAS MADE. SOME UTILITIES MAY NOT BE REFLECTED IN THESE PLANS. BEFORE EXCAVATION OR CONSTRUCTION, CONTACT THE SUNSHINE ONE CALL SERVICE @811 AND THE APPROPRIATE UTILITY COMPANIES FOR FIELD VERIFICATION. SUBSURFACE CASINGS, DUCT BANKS, FOOTINGS FOUNDATIONS, AND OTHER SUBSURFACE FEATURES ARE NOT LOCATED OR SHOWN HEREON ARE TO BE VERIFIED BY CONTRACTOR BEFORE COMMENCING ANY WORK.

14. PROVIDE 6 FOOT VINYL VISUAL BARRIER ON ALL FENCING AT CONSTRUCTION LIMITS.

15. THE CONTRACTOR SHALL BE RESPONSIBLE FOR MAINTAINING THE INTEGRITY AND MAKING THE REPAIRS OF EXISTING PAVEMENT, SIDEWALKS, PIPES, CONDUITS, CURBS, CABLES, ETC., WHETHER OR NOT SHOWN ON THE PLANS, DAMAGED AS A RESULT OF THE CONTRACTOR'S OPERATIONS AND/OR THOSE OF HIS SUBCONTRACTORS, AND SHALL RESTORE THEM PROMPTLY TO THE ORIGINAL CONDITIONS OR BETTER AT NO ADDITIONAL EXPENSE TO THE OWNER. CONTRACTOR SHALL REPORT ANY DAMAGED SIDEWALK, DRIVEWAY, ETC., PRIOR TO BEGINNING WORK IN ANY AREA.

16. EXISTING WATER METERS, UTILITY POLES & GUY WIRES AND OTHER UTILITIES WITHIN THE LIMITS OF CONSTRUCTION SHALL BE REMOVED OR RELOCATED UNLESS OTHERWISE NOTED.

17. ALL WORK SHALL CONFORM TO ALL APPLICABLE CODES, ORDINANCES, CITY OF CORAL GABLES STANDARDS AND DETAILS, MIAMI-DADE COUNTY DEPARTMENT OF ENVIRONMENTAL RESOURCES (DERM) STANDARDS AND DETAILS, FLORIDA DEPARTMENT OF TRANSPORTATION STANDARDS AND DETAILS, AND MIAMI-DADE COUNTY STANDARDS AND DETAILS.

TRENCH SAFETY ACT

(NOT A PART OF M-DWASD NOTES NOR APPROVAL)

1. TRENCHING: PROVIDE PROPERLY EXECUTED "TRENCH SAFETY ACT" STATEMENT (2 COPIES). FOR ALL EXCAVATIONS THAT EXCEED FIVE (5) FEET IN DEPTH FROM THE EXISTING SURFACE ELEVATION, THE CONTRACTOR MUST ASSURE THAT ALL PROVISIONS OF THE FLORIDA STATE BILL CS/SB 2626, THE 1990 "TRENCH SAFETY ACT" SHALL BE MET. THE BIDDER MUST IDENTIFY THE METHOD OR METHODS OF COMPLIANCE WITH THE "TRENCH SAFETY ACT". THE BIDDER MUST IDENTIFY THE COST TO COMPLY WITH THESE STANDARDS: EITHER ON A COST PER LINEAR FOOT OF TRENCH EXCAVATION AND/OR A COST PER SQUARE FOOT OF SHORING USED. NO SEPARATE PAYMENT WILL BE MADE FOR THESE ITEMS, BUT THEY MUST BE IDENTIFIED IN THE/THIS PROPOSAL/CERTIFICATE OF COMPLIANCE - TRENCH SAFETY ACT.

CONTRACTOR'S STATEMENT:

"WE WILL USE":

( ) SLOPING - ( ) SHORING - ( ) TRENCH BOX - ( ) OTHER

METHODS (SPECIFY WHICH) TO COMPLY WITH THE 1990 "TRENCH SAFETY ACT".

A. THE CURRENT TRENCH SAFETY STANDARDS IN EFFECT ARE OCCUPATIONAL SAFETY AND HEALTH ADMINISTRATIONS (OSHA) EXCAVATING SAFETY STANDARDS 29 C.F.R. PART 1926.650 SUBPART P.

B. THE COST OF COMPLIANCE WITH THIS TRENCH SAFETY ACT IS INCLUDED AS PART OF THE LUMP SUM OR UNIT PRICE PROPOSALS CONTAINED IN THE BID PACKAGE.

C. THE COST OF COMPLYING WITH THIS REQUIREMENT IS:

1) COST PER LIN. FT. OF TRENCH EXCAVATION $ _____

2) COST PER SQ. FT. OF SHORING USED $ _____

CONTRACTOR: _____ DATE: _____

PROGRESS SET

MERRICK MANOR

4133 LEJEUNE ROAD, CORAL GABLES, FLORIDA

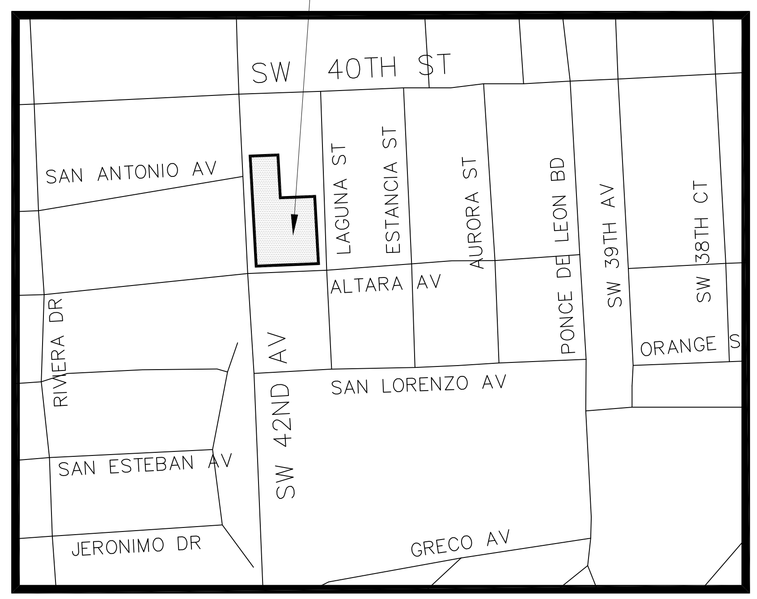

LOCATION MAP

SCALE: 1" = 300'

NORTH

LEGAL DESCRIPTION

LOTS 13 THRU 36, INCLUSIVE OF BLOCK 1 OF "CORAL GABLES INDUSTRIAL SECTION" ACCORDING TO THE PLAT THEREOF AS RECORDED IN PLAT BOOK 28 AT PAGE 22 OF THE PUBLIC RECORDS OF MIAMI-DADE COUNTY, FLORIDA.

(NOT A PART OF M-DWASD NOTES NOR APPROVAL)

FLOOD LEGEND

Commercial, Industrial

FOLIO: 03-4120-011-0300 / 0110 / 0100 / 0190 / 0180 / 0170 / 0160 / 0140 / 0130 / 0120

LOTS: 13 THRU 36 BLOCK: 1 SUBDIVISION: "CORAL GABLES INDUSTRIAL SECTION"

PLAT BOOK: 28 PAGE: 22 METES & BOUND: _____

CROWN OF ROAD ELEV.: + 11.92 FT. N.G.V.D., CROWN OF ROAD ELEVATION WAS TAKEN FROM A CERTIFIED SURVEY PREPARED BY: GEOFFREY LEITER, PSM PSM LIC.#. 6395
SURVEYOR'S NAME

DRAINAGE PLANS SHALL BE ATTACHED (IF>2 ACRES IMPERVIOUS, PLANS SHALL BE STAMPED WITH THE DERM WATER CONTROL SECTION APPROVAL)

DERM/UC- SURFACE WATER MANAGEMENT STORMWATER PERMIT (COPY ATTACHED) N/A

SFWMD- ENVIRONMENTAL RESOURCES PERMIT (COPY ATTACHED) N/A

TOTAL IMPERVIOUS AREA: 1.51 ACRES UNDERGROUND PARKING: YES/(NO)(CIRCLE ONE)
* IF YES, FLOODPROOFING PLANS AND CERTIFICATE SHALL BE ATTACHED
BASEMENT: YES / (NO) (CIRCLE ONE)

HAVE THIS SITE OR OTHER PORTIONS OF THIS PROPERTY BEEN GRANTED A CLOMR OR FINAL LOMR? (CIRCLE ONE) LOMR#. _____ YES (NO)

	Lowest Floor Elevation (including basement/ sunken areas)	Adjacent Grade Elev. (next to the wall of the structure)	Lowest Catch Basin Elevation
PROPOSED	(+) 12.25 FT. NGVD	(+) 12.21 FT. NGVD	(+) 11.50 FT. NGVD

0' - 0" = (+) 13.08 FT. NGVD

SITE DATA

(NOT A PART OF M-DWASD NOTES NOR APPROVAL)

FLOOD ZONE FIRM MAP PANEL No. = 12086C457L
ZONE "X" , DATED: 09-11-2009
BASE FLOOD ELEVATION = N/A
WATER TABLE ELEVATION OCT. H.W. = (+) 2.7 NGVD
FLOOD CRITERIA ELEVATION = (+) 6.5 NGVD

ENGINEER'S CERTIFICATION

(NOT A PART OF M-DWASD NOTES NOR APPROVAL)

I HEREBY CERTIFY: That this plan was prepared under my direction and to the best of my knowledge and belief complies with the intent of the "MANUAL OF UNIFORM STANDARDS FOR DESIGN, CONSTRUCTION AND MAINTENANCE FOR STREETS, AND HIGHWAYS", as adopted by the State of Florida Legislature, Chapter 72-328 F.S.

THESE PLANS ARE FOR BUILDING DEPARTMENT REVIEW ONLY. THEY ARE NOT TO BE CONSTRUED AS CONSTRUCTION DOCUMENTS UNTIL ALL BUILDING DEPARTMENT APPROVALS ARE OBTAINED.

1. ALL MATERIALS AND LABOR UNDER THIS PROJECT SHALL BE IN STRICT ACCORDANCE WITH THE REQUIREMENTS OF THE MIAMI-DADE WATER AND SEWER DEPARTMENT AND SHALL CONFORM TO THE STANDARDS AND SPECIFICATIONS AVAILABLE AND ON FILE WITH THE DEPARTMENT. SUBMIT SHOP DRAWINGS FOR ALL MATERIALS.
2. COVER OVER WATER OR SEWER FORCE MAINS SHALL BE 4'-0" MIN.
3. ALL MAIN LINE VALVES SHALL BE INSTALLED COMPLETE WITH 10" RISER PIPES AND NO. 3 OR 53 VALVE BOXES. FIRE HYDRANTS AND SERVICE VALVES SHALL BE INSTALLED COMPLETE WITH 6" RISER PIPES AND NO. 2 VALVE BOXES.
4. ALL FORCE MAIN SERVICE CONNECTIONS INTO PRESSURE TRANSMISSION MAINS SHALL HAVE A SHUT OFF VALVE AND CHECK VALVE AT THE POINT OF ENTRY.
5. ALL GRAVITY SYSTEMS SHALL BE CONSTRUCTED IN ACCORDANCE WITH DEPARTMENT STANDARDS.
6. ALL WATER METERS WILL BE INSTALLED BY THE MIAMI-DADE WATER AND SEWER DEPARTMENT PROVIDING THE APPROPRIATE CHARGES HAVE BEEN PREPAID.
7. FIRE HYDRANT REQUIREMENTS (NUMBER AND LOCATION) SHALL BE AS REQUIRED BY THE MIAMI-DADE COUNTY FIRE DEPARTMENT OR THE APPROPRIATE FIRE AGENCY WITH INSTALLATION IN ACCORDANCE WITH DEPARTMENT STANDARDS.
8. CONTRACTOR MUST CALL M-DWASD INSPECTION DIVISION TO ARRANGE FOR A PRECONSTRUCTION MEETING 2 FULL BUSINESS DAYS PRIOR TO PROPOSED START OF CONSTRUCTION. CONTACT ONE CALL CENTER 48 HRS PRIOR TO EXCAVATION.
9. CONTRACT INSPECTOR WILL INSPECT ANY FACILITIES APPROVED BY THE DEPARTMENT. ALL OTHER REQUIREMENTS OF THE PERMITTING AGENCY SHALL BE IN ACCORDANCE WITH THEIR STANDARDS AND REQUIREMENTS.
10. WORK PERFORMED UNDER THIS PROJECT WILL NOT BE CONSIDERED AS COMPLETE UNTIL FINAL ACCEPTANCE OF THE SYSTEM BY THE DEPARTMENT AND UNTIL THE FOLLOWING DOCUMENTS ARE RECEIVED AND APPROVED BY THE DEPARTMENT.
    a. EASEMENTS, IF REQUIRED.
    b. CONTRACTOR'S WAIVER AND RELEASE OF LIEN.
    c. ABSOLUTE BILL OF SALE.
    d. I. CONTRACTOR'S LETTER OF WARRANTY (I.E., LETTER AGREEMENT).
    II. DEVELOPER'S CONTRACT BOND (I.E., CONTRACT AGREEMENT).
    e. "AS-BUILT" PRINTS 24"x36" SHOWING SPECIFIC LOCATIONS, DEPTH, ETC. OF ALL WATER AND SEWER FACILITIES AS LOCATED BY A LICENSED FLORIDA SURVEYOR, ALONG WITH PRINTS OF "AS-BUILT" WHICH HAVE BEEN SIGNED AND SEALED BY A REGISTERED SURVEYOR. (No. OF PRINTS: 3-FOR WATER, 4-FOR GRAVITY SEWER AND 5-FOR FORCE MAIN OR PUMP STATION PROJECTS). THE DEPARTMENT RESERVES THE RIGHT TO REQUIRE SUBMITTAL ON ELECTRONIC MEDIA IN ACCORDANCE WITH SEC. 0175 "MAGNETIC MEDIA SUBMITTAL".
    f. H.R.S. LETTER OF RELEASE REQUIRED FOR ALL WATER PROJECTS.
    g. BILL OF SALE SKETCH (BS/V1) FOR WATER AND SEWER, SEPARATELY.
11. ALL NEW CONNECTIONS FROM EXISTING DEPARTMENT MAINS TO BE MADE BY DEPARTMENT FORCES ONLY. THE CONTRACTOR TO EXCAVATE AT REQUIRED LOCATIONS, PROVIDE AND INSTALL MATERIAL WITH FITTINGS, PRIOR TO TAP.
12. AN APPROVED PAVING AND DRAINAGE PLAN MUST BE SUBMITTED TO M-DWASD FOR ALL NEW SUBDIVISIONS PRIOR TO APPROVAL OF WATER AND SEWER PERMIT PLANS, UPON REQUEST.
13. UNLESS OTHERWISE SPECIFIED, ALL TAPS 20 INCHES AND SMALLER FOR CONNECTIONS TO EXISTING MAINS WILL BE DONE BY DEPARTMENT FORCES. UNDER NO CIRCUMSTANCES WILL THE CONTRACTOR BE PERMITTED TO TAP EXISTING MAINS IN THE SIZE RANGE SPECIFIED ABOVE. THE TAPPING SLEEVE AND TAPPING VALVE ARE FURNISHED AND INSTALLED BY THE CONTRACTOR UNDER THE SUPERVISION OF THE INSPECTOR.

ISSUE DATE	APPROVED BY	STANDARD DETAIL	ITEM	CROSS REF.	SPEC. REF.
03/01/2010	V.F.C.	STANDARD REQUIREMENTS WATER AND SEWER CONSTRUCTION		GS 0.5 SHEET 1 of 2	

MIAMI-DADE WATER & SEWER DEPARTMENT

1. AT THE COMPLETION OF ANY WATER AND SEWER JOB, (EITHER DONATION OR CONTRACT), THE CONTRACTOR SHALL SUBMIT:
    a. AS-BUILT PRINTS WHICH HAVE BEEN SIGNED AND SEALED BY A FLORIDA LICENSED PROFESSIONAL SURVEYOR AND MAPPER. (QTY. OF PRINTS, AS REQUIRED BY THE DEPARTMENT.)
2. "AS-BUILT" FORMAT:
    a. 24"x36" PRINTS
    b. LOCATION MAP SCALE SHOULD BE 1"=300' AND SECTION-TOWNSHIP-RANGE SHOULD BE SHOWN.
    c. THE WORD "AS-BUILT" IN LARGE LETTERS.
    d. TITLE BLOCK WITH DEPARTMENT ID, DW OR DR NUMBER AND PERTINENT INFORMATION.
    e. PREFERRED SCALE IS BE 1"= 40' HORIZONTALLY AND 1"= 4' VERTICALLY*.
    f. STREET NOMENCLATURE.
    g. SEPARATE AS-BUILTS FOR WATER AND SEWER.
    h. SEPARATE WATER AND SEWER PROFILE.
    i. STATIONING STARTING WITH 0+00 AT PERMANENT REFERENCE POINT (I.E., E, S, , ETC.) OR AS SHOWN ON DESIGN PERMIT PLANS, AND TO RUN CONTINUOUSLY TO END OF MAIN.
    j. EASEMENTS, IF ANY, TIED TO PERMANENT REFERENCE POINT.
    k. IDENTIFY ALL CONTROL LINES (I.E. BLDG. LINE, PROPERTY LINE, R/W, ETC).
    l. ALL "PROPOSED" INFORMATION TO BE REMOVED FROM PRINTS, LEAVING ONLY "AS-BUILT" INFORMATION REFLECTED IN DRAWINGS.
3. WATER "AS-BUILTS" MUST INCLUDE:
    a. PLANS SHOWING PIPE SIZE, MATERIAL AND OFFSET OF MAIN, DEFLECTIONS (IF ANY), STATION OF SERVICES, HYDRANTS AND FITTINGS AT THE WANLINE (IF PERPENDICULAR TO IT), AND AT MAIN AND END OF SERVICES IF ANY, OTHER ANGLE, AND DEFLECTION OF PIPE, IF ANY.
    b. PROFILE SHOWING TOP OF GROUND AND TOP OF PIPE ELEVATIONS AT EVERY 100' STATION AND AT ANY CHANGE IN GRADE (WITH CORRESPONDING STATION), PIPE SIZE AND PIPE MATERIALS REFERENCED TO PLAN.
4. SEWER "AS-BUILTS" MUST INCLUDE:
    a. PLAN SHOWING MANHOLE NUMBER, PIPE SIZE AND PIPE MATERIAL OF PIPE, DEFLECTION, IF ANY (FORCE MAIN ONLY), AND LOCATION OF LATERALS WITH REFERENCE TO MANHOLE.
    b. PROFILE SHOWING MANHOLE NUMBER (AS PER PLAN), RIM AND INVERT ELEVATIONS (IF MORE THAN ONE INVERT, LABEL NORTH, SOUTH , ETC), AND STATION STARTING AT EACH 0+00 AT DOWNSTREAM MANHOLE.
5. FORCE MAIN "AS-BUILT" SAME AS WATER MAIN ABOVE.
6. EACH AS-BUILT SHALL SHOW THE FLORIDA STATE PLANE COORDINATES (CURRENT READJUSTMENT) OF ALL THE MANHOLES AND VALVES AND OF AT LEAST TWO HORIZONTAL CONTROL POINTS PROPERLY IDENTIFIED AND LOCATED WITHIN THE PROJECT.

* OTHER SCALE MAY BE PERMITTED, BUT MUST BE APPROVED BY THE DEPARTMENT PRIOR TO SUBMITTAL OF DRAWINGS.

ISSUE DATE	APPROVED BY	STANDARD DETAIL	ITEM	CROSS REF.	SPEC. REF.
03/11/2009	V.F.C.	"AS-BUILT" REQUIREMENTS		GS 0.5 SHEET 2 of 2	

MIAMI-DADE WATER & SEWER DEPARTMENT

ARCHITECTURE
PLANNING
INTERIORS
Certification No. AA0002451

4533 PONCE DE LEON BLVD.
Coral Gables, Florida 33146
TEL: (305) 740-5442
FAX: (305) 740-5443
E-MAIL: info@beharfont.com

© 2011 BEHAR FONT & PARTNERS P.A. THE DESIGN AND DRAWINGS FOR THIS PROJECT ARE THE PROPERTY OF THIS ARCHITECT AND ARE PROTECTED UNDER THE COPYRIGHT PROTECTION ACT.

SEAL :

Javier Font AR No. 12547

CONSULTANT :

Aviñó & ASSOCIATES
ENGINEERING • PLANNING • SURVEYING
2655 LEJEUNE ROAD, SUITE 1010
CORAL GABLES, FLORIDA 33134
TEL.: (305) 446-0810
FAX.: (305) 447-8779
EMAIL: pedro@avinoassociates.com
WEB: www.avinoassociates.com

Jorge R. Aviñó, PE No. 22207
Civil Engineer

CLIENT:

BEHAR . FONT & PARTNERS, P.A.

PROPOSED MIXED-USE BUILDING
MERRICK MANOR
4133 LE JEUNE ROAD
CORAL GABLES, FLORIDA

OWNER :

DATE:
12-07-2011

REVISIONS:

PROJECT No.
11-011

DRAWN BY:
BJS

CHECKED BY:
JRA

SCALE:
AS SHOWN

SHEET No.
WS-1
1 OF 3

MIAMI-DADE WATER & SEWER AGREEMENT I.D. #20988

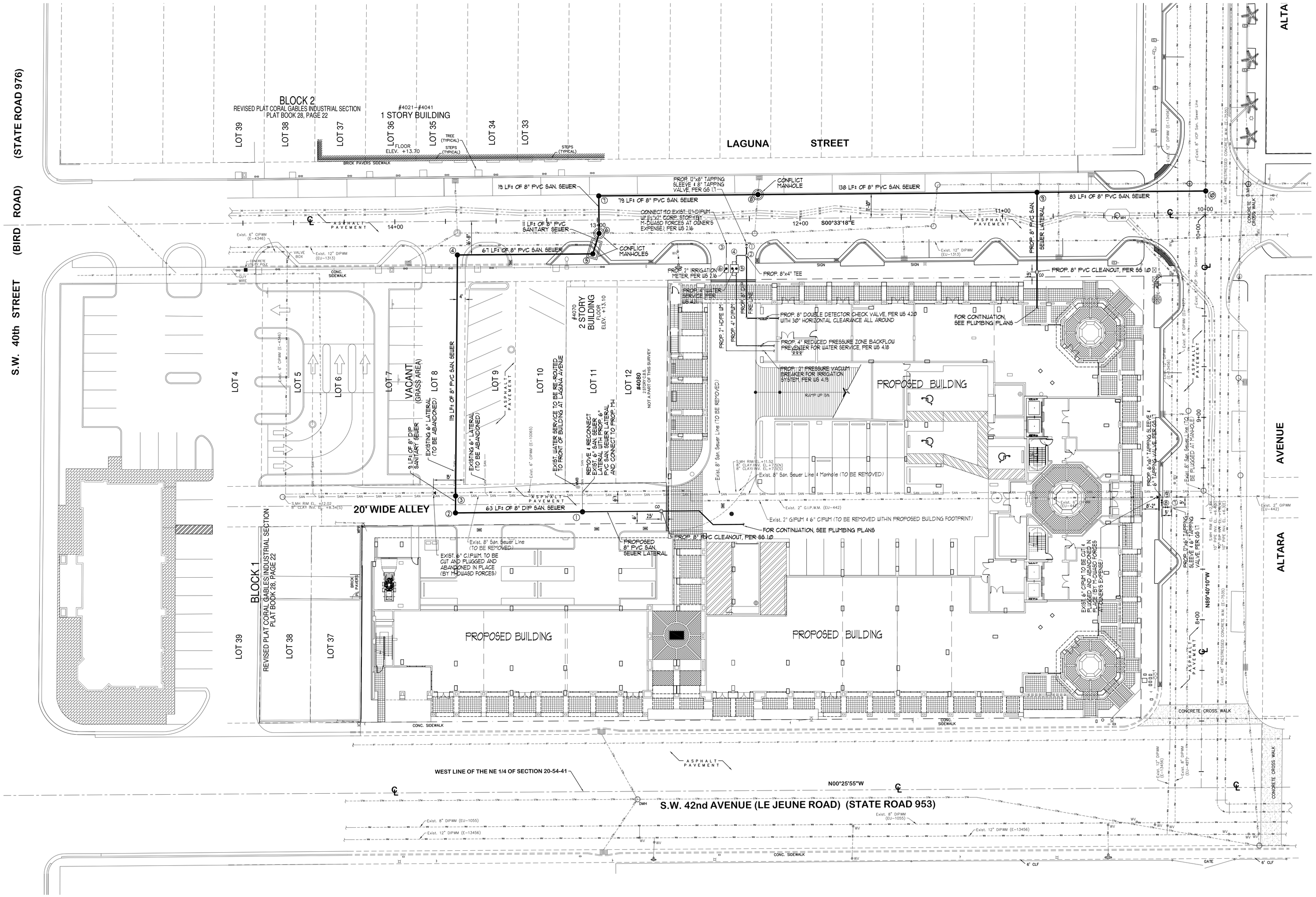

NORTH

WATER & SEWER PLAN

SCALE : 1" = 20'

NOTES

1. CONTRACTOR SHALL VERIFY THE LOCATIONS AND ELEVATIONS OF THE EXISTING 15" STORM SEWER LINES AND THE EXISTING 12" WATER LINE IN THE VICINITY OF THE PROPOSED 8" SANITARY SEWER MAIN TO VERIFY IF CONFLICT MANHOLES #5, #6 AND #8 ARE REQUIRED. CONTRACTOR TO NOTIFY ENGINEER IF CONFLICT MANHOLES, IF ANY, ARE REQUIRED BEFORE COMMENCING ANY WORK.
2. CONTRACTOR SHALL VERIFY THE LOCATIONS AND ELEVATIONS OF THE EXISTING FP&L DUCT IN THE VICINITY OF THE PROPOSED 8" SANITARY SEWER MAIN TO VERIFY THAT A 6" MINIMUM CLEARANCE IS ACHIEVED. CONTRACTOR TO NOTIFY ENGINEER IF ANY CONFLICTS ARE ENCOUNTERED BEFORE COMMENCING ANY WORK.

UNDERGROUND DIGGING NOTE:

1. CONTRACTOR SHALL USE EXTREME CAUTION WHEN EXCAVATING.
2. CONTRACTOR SHALL REMAIN 2 FEET AWAY FROM THE LOCATED MARKS WITH THE MACHINERY. IF IT'S NECESSARY TO EXCAVATE WITHIN THE 2 FOOT TOLERANCE ZONE, CONTRACTOR MUST HAND DIG, SOFT DIG, OR USE NONINVASIVE MEANS TO EXPOSE AND PROTECT THE EXISTING FACILITIES AS REQUIRED BY LAW.

811 KNOW WHAT'S BELOW ALWAYS CALL 811 BEFORE YOU DIG
www.callsunshine.com

PROGRESS SET

THESE PLANS ARE FOR BUILDING DEPARTMENT REVIEW ONLY. THEY ARE NOT TO BE CONSTRUED AS CONSTRUCTION DOCUMENTS UNTIL ALL BUILDING DEPARTMENT APPROVALS ARE OBTAINED.

BEHAR·FONT & PARTNERS, P.A.
ARCHITECTURE
PLANNING
INTERIORS
Certification No. AA0002451
4533 PONCE DE LEON BLVD.
Coral Gables, Florida 33146
TEL: (305) 740-5442
FAX: (305) 740-5443
E-MAIL: info@beharfont.com

© 2011 BEHAR FONT & PARTNERS P.A. THE DESIGN AND DRAWINGS FOR THIS PROJECT ARE THE PROPERTY OF THIS ARCHITECT AND ARE PROTECTED UNDER THE COPYRIGHT PROTECTION ACT.

SEAL :

Javier Font AR No. 12547

CONSULTANT :

Aviñó & ASSOCIATES
ENGINEERING • PLANNING • SURVEYING
2655 LE JEUNE ROAD, PENTHOUSE
CORAL GABLES, FLORIDA 33134
TEL.: (305) 446-0900
FAX: (305) 446-0907
E-MAIL: info@avinoassociates.com
WEB: www.avinoassociates.com

Jorge R. Aviñó, PE No. 22207
Civil Engineer

CLIENT:

PROPOSED MIXED-USE BUILDING
MERRICK MANOR
4133 LE JEUNE ROAD
CORAL GABLES, FLORIDA

OWNER:

DATE:
12-07-2011

REVISIONS:

PROJECT No.
11-011

DRAWN BY:
BJS

CHECKED BY:
JRA

SCALE:
AS SHOWN

SHEET No.
WS-2
2 OF 3

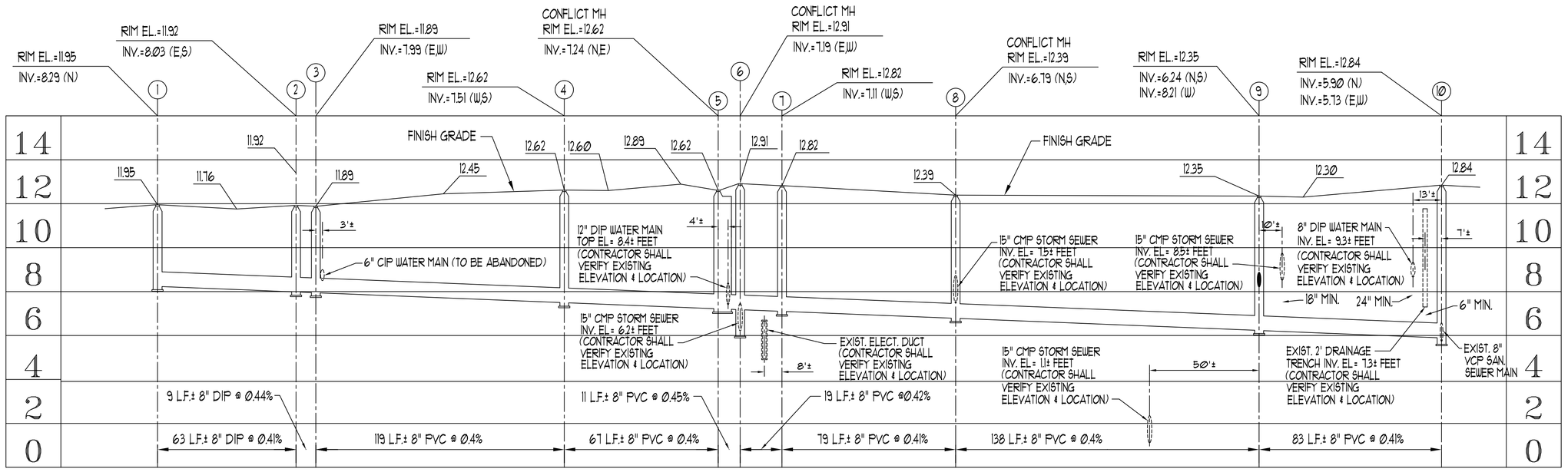

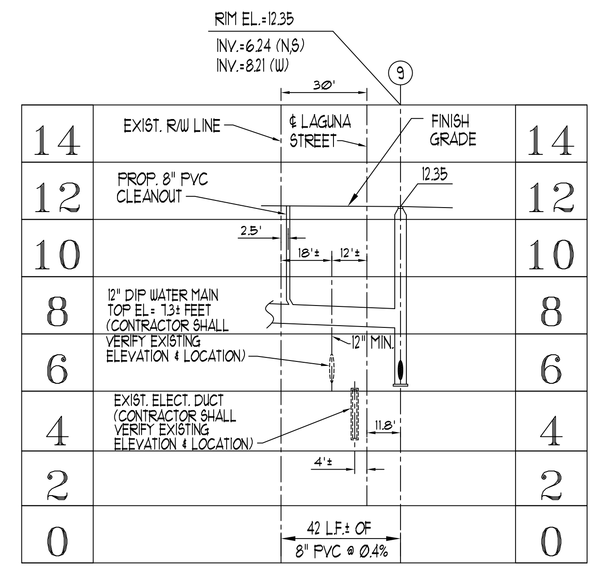

SCALE: HORIZONTAL 1"=20'
VERTICAL 1"=2'

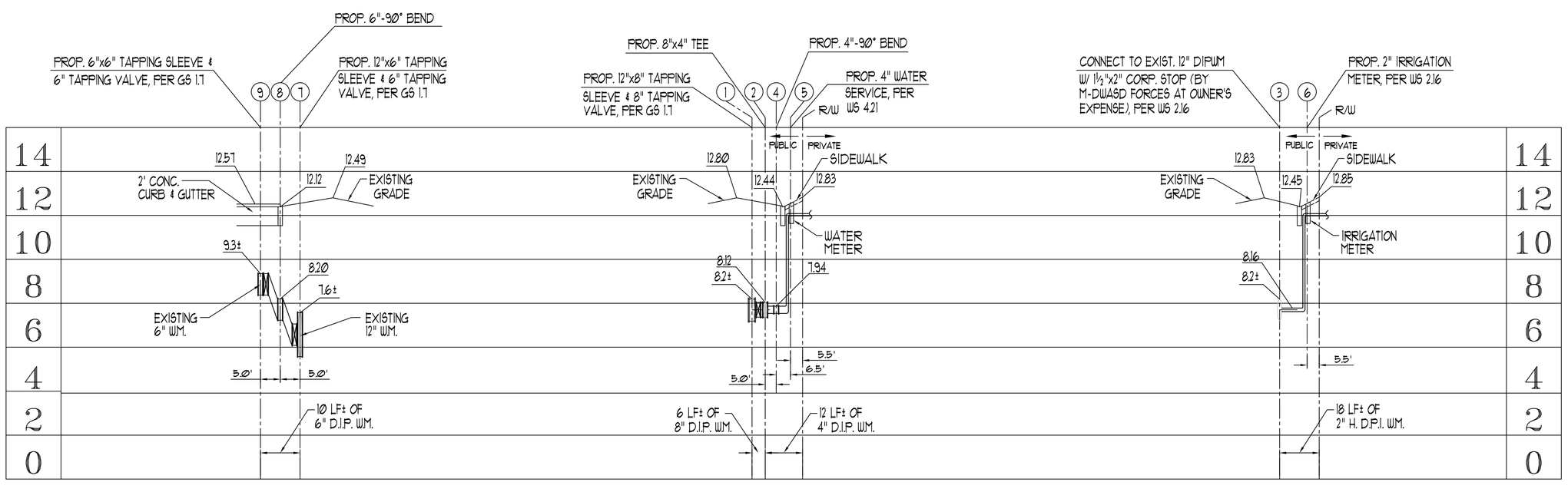

SCALE: HORIZONTAL 1"=20'
VERTICAL 1"=2'

WATER & SEWER PROFILES

UNDERGROUND DIGGING NOTE:

1. CONTRACTOR SHALL USE EXTREME CAUTION WHEN EXCAVATING.
2. CONTRACTOR SHALL REMAIN 2 FEET AWAY FROM THE LOCATED MARKS WITH THE MACHINERY. IF IT'S NECESSARY TO EXCAVATE WITHIN THE 2 FOOT TOLERANCE ZONE, CONTRACTOR MUST HAND DIG, SOFT DIG, OR USE NONINVASIVE MEANS TO EXPOSE AND PROTECT THE EXISTING FACILITIES AS REQUIRED BY LAW.

PROGRESS SET

811 KNOW WHAT'S BELOW ALWAYS CALL 811 BEFORE YOU DIG
It's Your Call. It's Your Life. It's The Law.
www.callsunshine.com

THESE PLANS ARE FOR BUILDING DEPARTMENT REVIEW ONLY. THEY ARE NOT TO BE CONSTRUED AS CONSTRUCTION DOCUMENTS UNTIL ALL BUILDING DEPARTMENT APPROVALS ARE OBTAINED.

BEHAR · FONT & PARTNERS, P.A.
ARCHITECTURE
PLANNING
INTERIORS
Certification No. AA0002451
4533 PONCE DE LEON BLVD.
Coral Gables, Florida 33146
TEL: (305) 740-5442
FAX: (305) 740-5443
E-MAIL: info@beharfont.com
© 2011 BEHAR FONT & PARTNERS P.A. THE DESIGN AND DRAWINGS FOR THIS PROJECT ARE THE PROPERTY OF THIS ARCHITECT AND ARE PROTECTED UNDER THE COPYRIGHT PROTECTION ACT.
SEAL:
Javier Font AR No. 12547
CONSULTANT:
Aviñó & ASSOCIATES
ENGINEERING • PLANNING • SURVEYING
2655 LEJEUNE ROAD, SUITE 1010
CORAL GABLES, FLORIDA 33134
TEL.: (305) 446-0810
FAX: (305) 447-8779
E.B. # 3654 S.B. # 3654
WWW.AVINOANDASSOCIATES.COM
Jorge R. Aviñó, PE No. 22207
Civil Engineer
CLIENT:
PROPOSED MIXED-USE BUILDING
MERRICK MANOR
4133 LE JEUNE ROAD
CORAL GABLES, FLORIDA
OWNER:
DATE:
12-07-2011
REVISIONS:
PROJECT No.
11-011
DRAWN BY:
BJS
CHECKED BY:
JRA
SCALE:
AS SHOWN
SHEET No.
WS-3
3 OF 3

Merrick Manor

traffic study

prepared for:
The Astor Companies

Traf Tech
ENGINEERING, INC.

October 2011

Traf Tech
ENGINEERING, INC.

October 27, 2011

Mr. Philip Parenteau
Property Development and Design Manager
The Astor Companies
2601 South Bayshore Drive, Suite 1800
Miami, Florida 33133

Re: Merrick Manor – Updated Traffic Study

Dear Phil:

Traf Tech Engineering, Inc. is pleased to provide you with the results of the updated traffic study undertaken for the proposed Merrick Manor mixed-use development planned to be located on the east side of Le Jeune Road just north of Altara Avenue in the City of Coral Gables, Florida. The study addresses the all traffic-related comments provided by the City of Coral Gables' traffic consultant (C3TS).

It has been a pleasure working with The Astor Companies on this project.

Sincerely,

TRAF TECH ENGINEERING, INC.

Joaquin E. Vargas, P.E.
Senior Transportation Engineer

8400 North University Drive, Suite 309, Tamarac, Florida 33321
Tel: (954) 582-0988 Fax: (954) 582-0989 E-mail: joaquin@traftech.biz

TABLE OF CONTENTS

INTRODUCTION 1

INVENTORY 3
Existing Land Uses 3
Proposed Land Uses and Access 3

EXISTING CONDITIONS 4
Roadway System 4
Intersections 4

TRAFFIC COUNTS 6

TRIP GENERATION 8

TRIP DISTRIBUTION AND TRAFFIC ASSIGNMENT 10

TRAFFIC ANALYSIS 12
Future Conditions Traffic Volumes 12
Level of Service Analyses 12
Access Driveway Analyses 17

CONCLUSIONS 18

LIST OF FIGURES

FIGURE 1 – Project Location Map 2
FIGURE 2 – Existing Lane Geometry 5
FIGURE 3 – Existing Traffic Counts – September 15, 2011 7
FIGURE 4 – Project Traffic Assignment 11
FIGURE 5 –Background Traffic Year 2013 13
FIGURE 6 –Total Traffic w/Project Year 2013 14

LIST OF TABLES

TABLE 1 – Trip Generation Summary 8
TABLE 2 – Project Trip Distribution 10
TABLE 3a – Intersection Level of Service Analyses – Signalized Intersections 15
TABLE 3b – Intersection Level of Service Analyses – Signalized Intersections 15
TABLE 4a – Intersection Level of Service Analyses – Stop Control Intersections 16
TABLE 4b – Intersection Level of Service Analyses – Stop Control Intersections 16

INTRODUCTION

Merrick Manor is a proposed mixed-use development planned to be located on the east side of Le Jeune Road just north of Altara Avenue in the City of Coral Gables, Florida. The subject mixed-use development will include residential and commercial/restaurant uses. Figure 1 on the following page shows the location of the project site as well as the transportation network located in the immediate vicinity of the site.

Traf Tech Engineering, Inc. was retained by The Astor Companies to conduct a traffic study in connection with the proposed Merrick Manor mixed-use project. The study addresses trip generation, access to the site, the traffic impacts on the nearby transportation network, and potential roadway improvement intended to mitigate the new trips generated by the project, if any.

This study is divided into seven (7) sections, as listed below:

1. Inventory
2. Existing Conditions
3. Traffic Counts
4. Trip Generation
5. Trip Distribution and Traffic Assignment
6. Traffic Analysis
7. Conclusions

TrafTech
ENGINEERING, INC.

PROJECT LOCATION MAP

FIGURE 1
Merrick Manor
Coral Gables, Florida

Existing Land Uses

The project site currently consists of several one and two story commercial/warehouse buildings and off-street parking.

Proposed Land Uses and Access

The Merrick Manor project will consist of the following land uses and intensities:

- 188 Rental Apartments
- Approximately 1,900 square feet of retail use
- Approximately 5,600 square feet of restaurant use

The access to the project will be provided via Laguna Street which borders the site on the east side.

For purposes of this traffic study, the project is anticipated to be built and occupied by the year 2013. Appendix A contains a copy of the proposed site plan for the Merrick Manor mixed-use project.

EXISTING CONDITIONS

This section addresses the roadway system surrounding the project site and intersections.

Roadway System

The transportation network located in the vicinity of the project site includes two main roadways and two local facilities that primarily function as access streets to nearby land uses. The two main facilities include Bird Road and Le Jeune Road. Both Bird Road and Le Jeune Road are four lane facilities. The two local streets include Altara Avenue and Laguna Street. The two local streets provide one through lane in each direction (two-lane roadways).

Intersections

For purposes of this study, four intersections located in the vicinity of the project were selected for analysis purposes. The four intersections are described below:

1. *Bird Road and Le Jeune Road*: This is a signalized intersection.

2. *Bird Road and Salzedo Street*: This is a stop-control intersection with a stop sign on the south leg (Salzedo Street).

3. *Le Jeune Road and Altara Avenue*: This is a signalized intersection.

4. *Altara Avenue and Laguna Street*: This is a stop-control intersection with stop signs on Laguna Street.

Figure 2 depicts the number of lanes on the roadways located within the study area of the proposed project. The turning lanes provided at the intersections selected for analysis purposes are also illustrated in the figure.

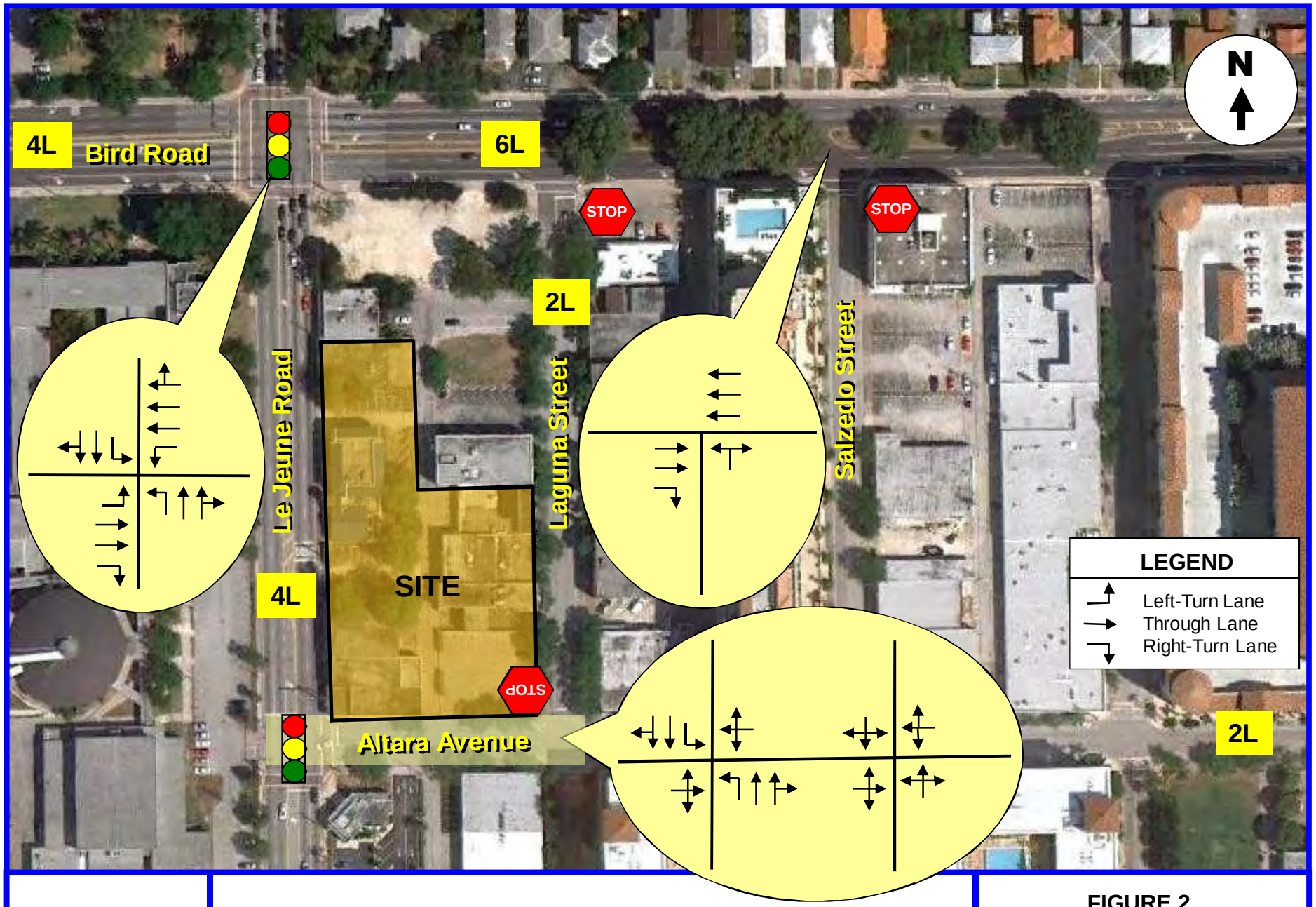

TrafTech
ENGINEERING, INC.

EXISTING LANE GEOMETRY

FIGURE 2
Merrick Manor
Coral Gables, Florida

TRAFFIC COUNTS

Traf Tech Engineering, Inc., in association with Crossroads Engineering Data, Inc., collected intersection turning movement counts at the following four (4) intersections located within the study area:

1. Bird Road and Le Jeune Road (signalized)
2. Le Jeune Road and Altara Avenue (signalized)
3. Bird Road and Salzedo Street
4. Altara Avenue and Laguna Street

The intersection turning movement counts were collected on Thursday, September 15, 2011 during a 6-hour period encompassing the morning and afternoon peak periods. The time period for the traffic counts was selected in order to overlap with the school's arrival and dismissal peak periods.

Figure 3 summarizes the results of the intersection turning movement counts. Appendix B contains the traffic counts, as collected in the field. The signal timing for the signalized intersections of Bird Road/Le Jeune Road and Le Jeune Road/Altara Avenue were obtained from the following website: **http://md-atms.com/TrafficOpsMenu.aspx**. The timing sheets are also contained in Appendix B.

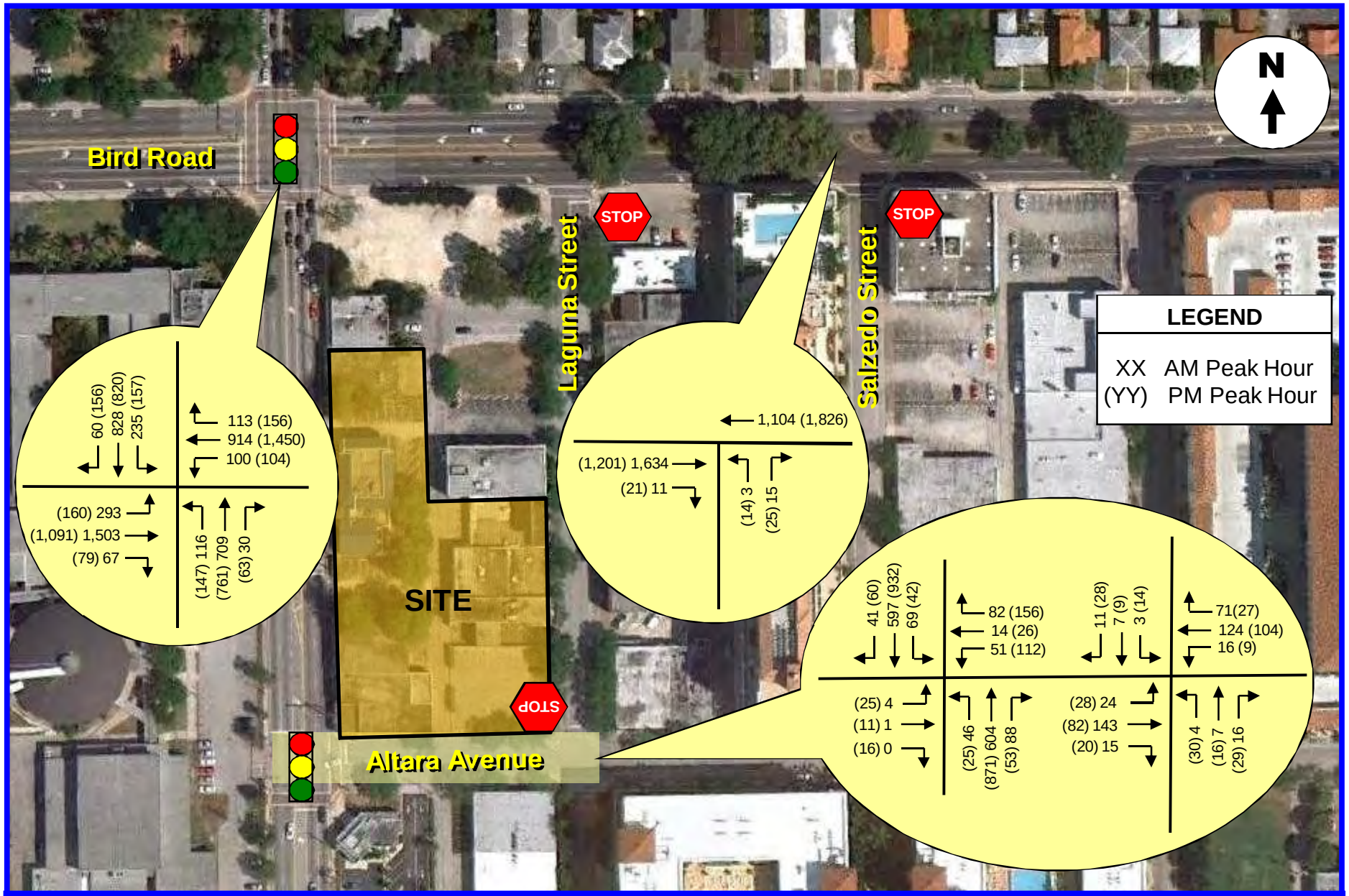

TrafTech
ENGINEERING, INC.

EXISTING TRAFFIC COUNTS
(September 15, 2011)

FIGURE 3
Merrick Manor
Coral Gables, Florida

TRIP GENERATION

The trip generation for the proposed Merrick Manor mixed-use development was based on information contained in the Institute of Transportation Engineer's (ITE) *Trip Generation* manual (8th Edition). According to the subject ITE manual, the most appropriate "land use" categories for the subject project is ITE's Land Use 220 – Apartment, ITE's Land Use 814 – Specialty Retail, and ITE's Land Use 931 – Quality Restaurant.

Table 1 summarizes the trip generation associated with the Merrick Manor development. As indicated in Table 1, the proposed mixed-use development is projected to generate approximately 1,851 new daily trips, approximately 101 new AM peak hour trips (22 inbound and 79 outbound), and approximately 168 new trip during the typical afternoon peak hour (109 inbound and 59 outbound).

TABLE 1
Merrick Manor
Trip Generation Summary

			AM Peak Trips		PM Peak Trips	
Land Use	Size	Daily Trips	Inbound	Outbound	Inbound	Outbound
Apartments	188 units	1,263	19	77	79	42
Retail	1,900 sq.ft.	84	0	0	2	3
Restaurant	5,600 sq.ft.	504	3	2	28	14
Total External Trips		1,851	22	79	109	59

Source: ITE Trip Generation Manual (8th Edition).

The trip generation equations for the Merrick Manor mixed-use project, given by ITE, are:

<u>RESIDENTIAL LAND USE (Land Use 220)</u>

Daily Trips

T = 6.06 (X) + 123.56
Where T = average daily vehicle trip ends
X = number of residential units

AM Peak Hour of Adjacent Street (Typical Morning Rush Hour)

T = 0.49 (X) + 3.73 (20% inbound and 80% outbound)
Where T = average AM peak hour vehicle trip ends
X = number of residential units

PM Peak Hour of Adjacent Street (Typical Afternoon Rush Hour)

T = 0.55 (X) + 17.65 (65% inbound and 35% outbound)
Where T = average PM peak hour vehicle trip ends
X = number of residential units

SPECIALTY RETAIL (Land Use 814)

Daily Trips

T = 44.32 (X)

Where T = average daily vehicle trip ends

X = 1,000 square feet of gross leasable area

AM Peak Hour of Adjacent Street (Typical Morning Rush Hour)

T = 0

PM Peak Hour of Adjacent Street (Typical Afternoon Rush Hour)

T = 2.71 (X) (44% inbound and 56% outbound)

Where T = average PM peak hour vehicle trip ends

X = 1,000 square feet of gross leasable area

QUALITY RESTAURANT (Land Use 931)

Daily Trips

T = 89.95 (X)

Where T = average daily vehicle trip ends

X = 1,000 square feet of gross floor area

AM Peak Hour of Adjacent Street (Typical Morning Rush Hour)

T = 0.81 (X) (n/a; assumed to be 50% inbound and 50% outbound)

Where T = average AM peak hour vehicle trip ends

X = 1,000 square feet of gross floor area

PM Peak Hour of Adjacent Street (Typical Afternoon Rush Hour)

T = 7.49 (X) (67% inbound and 33% outbound)

Where T = average PM peak hour vehicle trip ends

X = 1,000 square feet of gross floor area

In order to assess impacts with a conservative approach, no internal capture or passer-by trips were assumed for the subject project.

TRIP DISTRIBUTION AND TRAFFIC ASSIGNMENT

The trip distribution was based on Miami-Dade County's Cardinal Distribution information for the study area. Table 2 below summarizes the county's cardinal distribution data for traffic zone 1081, which is applicable to the location of the subject project. Appendix C contains the County's cardinal distribution information for traffic zone 1081.

TABLE 2
Project Trip Distribution
Merrick Manor

Direction		% of Total Trips
North:	Northwest	11.31%
	Northeast	25.33%
South:	Southwest	17.78%
	Southeast	4.45%
East:	Northeast	14.13%
	Southeast	4.80%
West:	Northwest	7.55%
	Southwest	14.65%
	Total	100.00%

Source: Miami-Dade County

Using the trip distribution documented in Table 2, the traffic assignment assumed for the proposed mixed-use development is as follows:

- 36% to and from the north via Le Jeune Road
- 22% to and from the south via Le Jeune Road
- 20% to and from the east via Bird Road
- 22% to and from the west via Bird Road

The AM and PM peak hour traffic generated by the project was assigned to the project driveway and nearby study intersections using the traffic assignment documented above. The project traffic assignment is summarized in Figure 4.

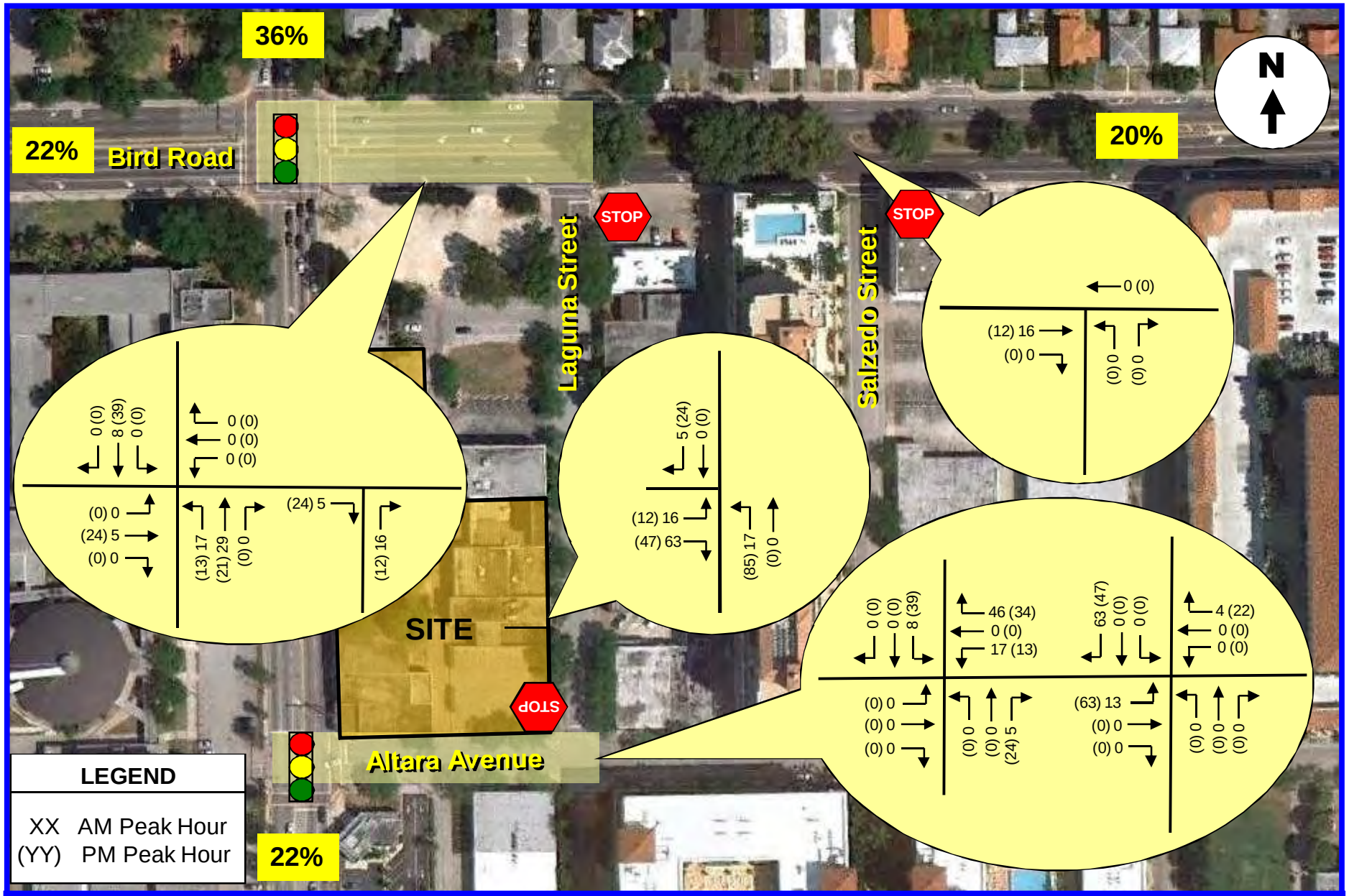

TrafTech ENGINEERING, INC.

PROJECT TRAFFIC ASSIGNMENT

FIGURE 4
Merrick Manor
Coral Gables, Florida

TRAFFIC ANALYSIS

This section of the study is divided into three parts. The first part consists of developing the future conditions traffic volumes for the study area. The second part includes level-of-service analyses for existing and future conditions. The third section addresses the projected operating conditions of the access driveway off of Laguna Street.

Future Conditions Traffic Volumes

Two sets of future traffic volumes were developed for the projected built-out year of 2013. The first set is the no-build condition without the proposed project and the second set is the build condition which adds the traffic anticipated to be generated by the Merrick Manor mixed-use development

In order to develop future-year traffic volumes, without the proposed project, two separate analyses were undertaken. The first analysis converts the existing AM and PM peak hour traffic counts collected in the field during the month of September to average peak season conditions. Based on FDOT's Peak Season Factor Category report, an adjustment factor of 1.01 is required to convert traffic counts collected in mid-September to average peak season conditions (refer to Appendix D). The second analysis includes a growth factor to project 2011 peak season traffic volumes to future conditions (year 2013). For purposes of this traffic study, a 1.5% growth rate was applied to the 2011 traffic counts in order to develop 2013 background traffic conditions. The 1.5% traffic growth rate is considered conservative since three nearby traffic count stations have reflected negligible traffic growth along Bird Road and Le Jeune Road during the past five years (refer to Appendix D). Additionally, the future trips associated with the approved Chase Bank that is planned to be located on the southeast corner of Le Jeune Road and Bird Road was added as committed development trips (refer to Appendix E).

The future traffic calculations (peak season adjustments, traffic growth, committed development trips, and the traffic associated with the proposed mixed-use development) for the study intersections are contained in Appendix F in tabular format.

Figures 5 and 6 present the future traffic volumes for the study area. Figure 5 includes background traffic only (without the proposed project) and Figure 6 includes the additional traffic anticipated to be generated by the Merrick Manor project.

Level of Service Analyses

Intersection capacity analyses were performed for the four study intersections. The analyses were undertaken following the capacity/level of service procedures outlined in the Highway Capacity Manual. The results of the intersection analyses are summarized in Tables 3a, 3b, 4a and 4b. Appendix G contains the computer printouts of the intersection capacity analyses.

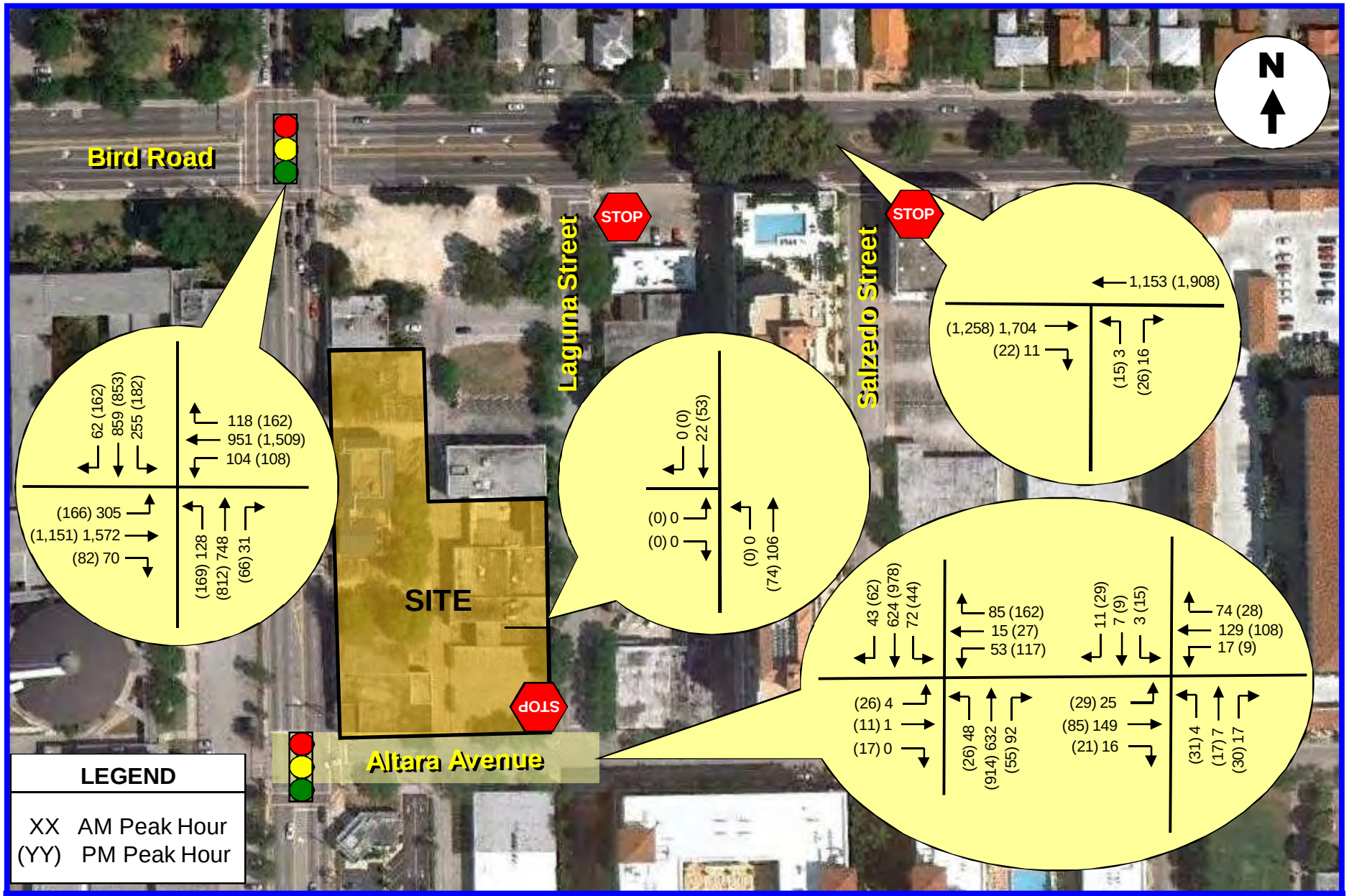

TrafTech ENGINEERING, INC.

BACKGROUND TRAFFIC – YEAR 2013

FIGURE 5
Merrick Manor
Coral Gables, Florida

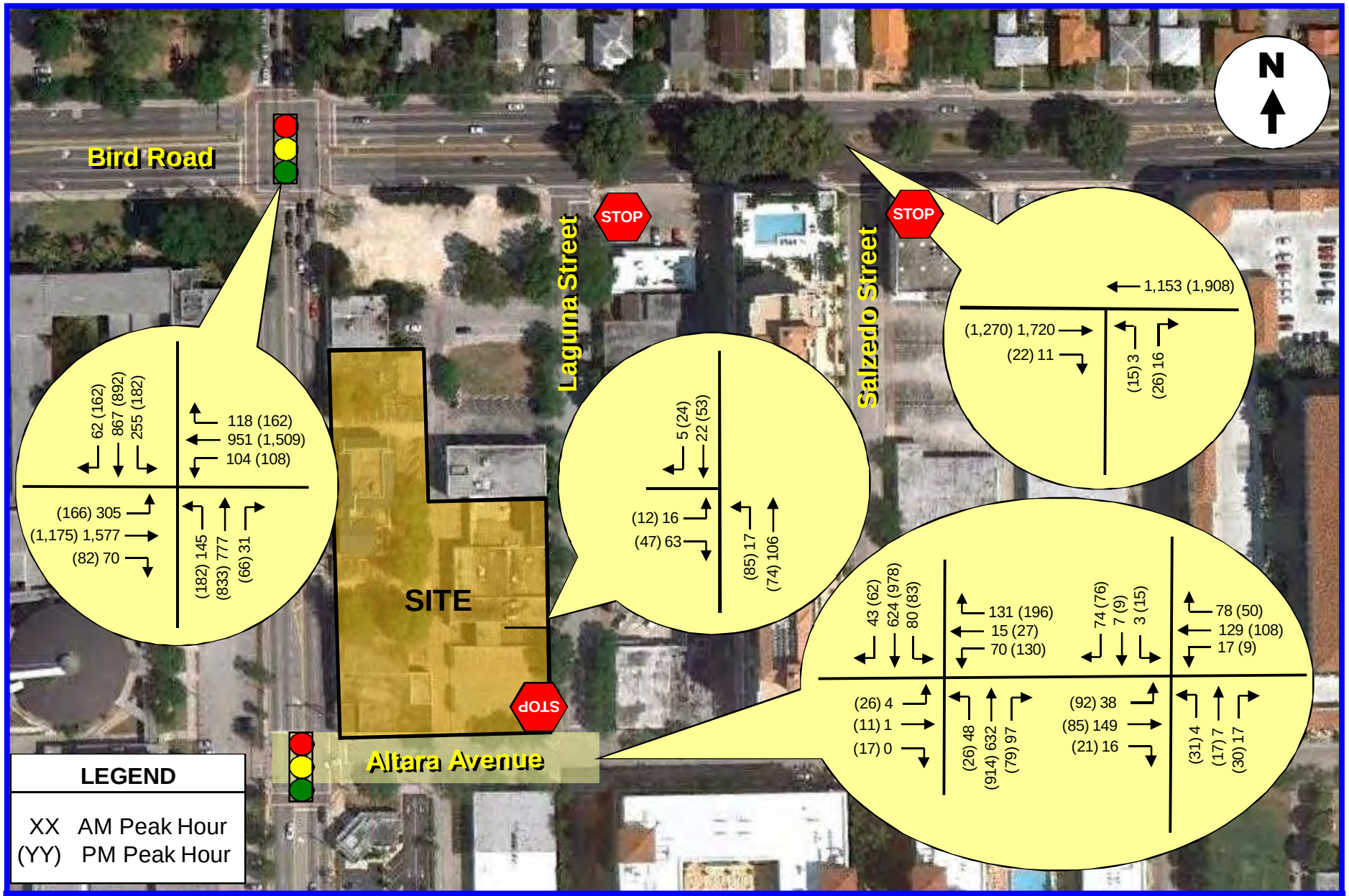

TrafTech ENGINEERING, INC.

TOTAL TRAFFIC w/PROJECT – YEAR 2013

FIGURE 6
Merrick Manor
Coral Gables, Florida

TABLE 3a Intersection Level of Service – Signalized Intersections – AM Peak Hour Merrick Manor			
		Future Traffic Conditions	
Intersection	2011 Existing	2013 Without Project	2013 With Project
Bird Road/Le Jeune Road	**64.6/E**	**74.3/E**	**76.3/E**
- NB Approach	59.1/E	65.4/E	72.9/E
- SB Approach	132.3/F	153.6/F	156.0/F
- EB Approach	50.6/D	59.6/E	59.7/E
- WB Approach	24.3/C	26.4/C	26.4/C
Le Jeune Road/Altara Ave	**11.9/B**	**12.5/B**	**29.8/C [15.9/B]**
- NB Approach	4.9/A	5.0/A	5.0/A [11.2/B]
- SB Approach	4.8/A	4.9/A	4.9/A [11.0/B]
- EB Approach	46.0/D	46.0/D	46.0/D [34.2/C]
- WB Approach	79.9/E	86.3/F	204.9/F [49.7/D]

Source: Highway Capacity Manual. LEGEND: Delay (Seconds)/LOS [w/Timing Updates]

TABLE 3b Intersection Level of Service – Signalized Intersections – PM Peak Hour Merrick Manor			
		Future Traffic Conditions	
Intersection	2011 Existing	2013 Without Project	2013 With Project
Bird Road/Le Jeune Road	**51.1/D**	**59.7/E**	**63.9/E**
- NB Approach	63.2/E	75.0/E	85.0/F
- SB Approach	81.3/F	102.8/F	110.8/F
- EB Approach	44.2/D	48.4/D	48.5/D
- WB Approach	29.4/C	30.7/C	30.9/C
Le Jeune Road/Altara Ave	**31.2/C**	**33.5/C**	**48.1/D [19.8/B]**
- NB Approach	5.2/A	5.3/A	5.4/A [14.0/B]
- SB Approach	5.4/A	5.5/A	5.5/A [14.3/B]
- EB Approach	47.8/D	48.0/D	48.1/D [32.0/C]
- WB Approach	202.8/F	222.1/F	307.2/F [52.4/D]

Source: Highway Capacity Manual. LEGEND: Delay (Seconds)/LOS [w/Timing Updates]

As indicated in Tables 3a and 3b, the signalized intersection of Bird Road and Le Jeune Road is projected to fail without the proposed project in the year 2013. The proposed project will not degrade (change the overall level of service) the operating conditions of the Bird Road/Le Jeune Road intersection.

Additionally, the intersection of Le Jeune Road and Altara Avenue is currently operating at an acceptable level of service and will continue to operate adequately with the proposed project in place. However, the westbound approach of this intersection is projected to fail with and without the proposed Merrick Manor project in place. The poor operating condition on the westbound approach is attributed to the minimal green time allocated by Miami-Dade County to the subject deficient approach. With reasonable signal timing adjustments, the westbound approach operates adequately and the intersection as a whole improves to level of service "B". It is therefore recommended that after this project is built, a request should be made to Miami-Dade County to adjust the signal timing plan in order to provide acceptable level of service on all approaches and the intersection as a whole.

TABLE 4a
Intersection Level of Service – Stop Control Intersections – AM Peak Hour
Merrick Manor

Intersection/Movements	2011 Existing	Future Traffic Conditions: Year 2013 Without Project	Future Traffic Conditions: Year 2013 With Project
Bird Road/Salzedo Street			
- NB Approach	22.3/C	23.5/C	23.8/C
Altara Ave/Laguna Street			
- EB Left-Turn	8.1/A	8.2/A	8.3/A
- WB Left-Turn	7.8/A	8.0/A	8.0/A
- NB Approach	13.7/B	14.0/B	15.5/C
- SB Approach	13.9/B	14.0/B	13.1/B

Source: Highway Capacity Manual. LEGEND: Delay (Seconds)/LOS

TABLE 4b
Intersection Level of Service – Stop Control Intersections – PM Peak Hour
Merrick Manor

Intersection/Movements	2011 Existing	Future Traffic Conditions: Year 2013 Without Project	Future Traffic Conditions: Year 2013 With Project
Bird Road/Salzedo Street			
- NB Approach	20.4/C	22.0/C	22.0/C
Altara Ave/Laguna Street			
- EB Left-Turn	7.7/A	7.7/A	8.0/A
- WB Left-Turn	7.5/A	7.5/A	7.5/A
- NB Approach	12.5/B	12.7/B	17.6/C
- SB Approach	11.4/B	11.6/B	12.8/B

Source: Highway Capacity Manual. LEGEND: Delay (Seconds)/LOS

As indicated in Tables 4a and 4b, the two stop-control intersections (Bird Road/Salzedo Street and Altara Avenue/Laguna Street) are currently operating at an acceptable level of service and will continue to operate adequately with the proposed Merrick Manor mixed-use project in place.

Access Driveway Analysis

The main access driveway off of Laguna Street was also evaluated using the capacity/level of service procedures outlined in the Highway Capacity Manual. The results of the driveway analyses indicate that the main access driveway is projected to operate at a very good level of service (LOS "A") as proposed. Appendix G contains the computer printouts of the driveway capacity analyses.

CONCLUSIONS

Merrick Manor is a proposed mixed-use development planned to be located on the east side of Le Jeune Road just north of Altara Avenue in the City of Coral Gables, Florida. The subject mixed-use development will include residential and commercial/restaurant uses. Traf Tech Engineering, Inc. was retained by The Astor Companies to conduct a traffic study in connection with the proposed Merrick Manor mixed-use project. The study addresses trip generation, access to the site, and the traffic impacts on the nearby transportation network. The project site currently consists of several one and two story commercial/warehouse buildings and off-street parking. The Merrick Manor project will consist of the following land uses and intensities:

- 188 Rental Apartments
- Approximately 1,900 square feet of retail use
- Approximately 5,600 square feet of restaurant use

The access to the project will be provided via Laguna Street which borders the site on the east side. The conclusions of the traffic study are presented below:

- The proposed mixed-use development is projected to generate approximately 1,851 new daily trips, approximately 101 new AM peak hour trips (22 inbound and 79 outbound), and approximately 168 new trip during the typical afternoon peak hour (109 inbound and 59 outbound).

- The signalized intersection of Bird Road and Le Jeune Road is projected to fail in without the proposed project in the year 2013. The proposed project will not degrade (change the overall level of service) the operating conditions of the Bird Road/Le Jeune Road intersection.

- The intersection of Le Jeune Road and Altara Avenue is currently operating at an acceptable level of service and will continue to operate adequately with the proposed project in place. However, the westbound approach of this intersection is projected to fail with and without the proposed Merrick Manor project in place. The poor operating condition on the westbound approach is attributed to the minimal green time allocated by Miami-Dade County to the subject deficient approach. With reasonable signal timing adjustments, the westbound approach operates adequately and the intersection as a whole improves to level of service "B". It is therefore recommended that after this project is built, a request should be made to Miami-Dade County to adjust the signal timing plan in order to provide acceptable level of service on all approaches and the intersection as a whole.

- The results of the driveway analyses indicate that the main access driveway is projected to operate at a very good level of service (LOS "A") as proposed.

APPENDIX A

Site Plan – Merrick Manor

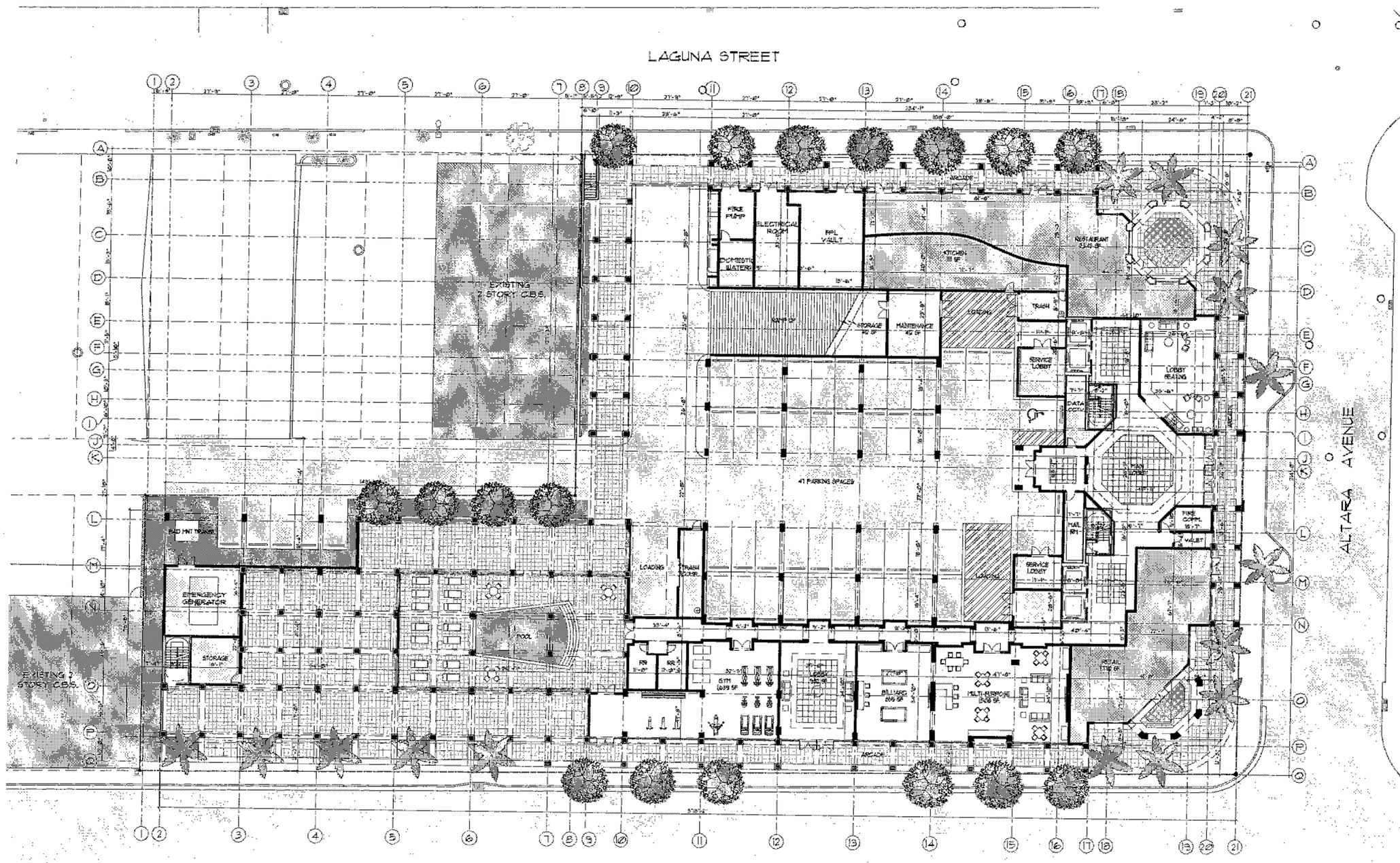

GROUND LEVEL FLOOR PLAN

SCALE: 1/16" = 1'-0"

NO COPIES, REPRODUCTIONS, TRANSMISSIONS OR ELECTRONIC MANIPULATION OF ANY PORTION OF THESE DRAWINGS IN WHOLE OR IN PART ARE TO BE MADE WITHOUT THE EXPRESS WRITTEN PERMISSION OF BEHAR FONT & PARTNERS, P.A. ALL DESIGNS INDICATED IN THESE DRAWINGS ARE PROPERTY OF BEHAR FONT & PARTNERS, P.A. ALL COPYRIGHTS RESERVED (C) 2008. THESE PLANS ARE FOR BUILDING DEPARTMENT REVIEW ONLY. THEY ARE NOT TO BE CONSTRUED AS CONSTRUCTION DOCUMENTS UNTIL ALL BUILDING DEPARTMENT APPROVALS ARE OBTAINED.

BEHAR · FONT & PARTNERS, P.A.
ARCHITECTURE
PLANNING
INTERIORS
Certification No. AA0002466
4533 PONCE DE LEON BLVD.
Coral Gables, Florida 33146
TEL: (305) 740-5442
FAX: (305) 740-5443
E-MAIL: info@bfpartners.com

© 2007 BEHAR FONT & PARTNERS, P.A.
THE DESIGN AND DRAWINGS FOR THIS PROJECT ARE THE PROPERTY OF BEHAR FONT & PARTNERS, P.A. AND ARE PROTECTED UNDER THE COPYRIGHT PROTECTION ACT.

SEAL:

Javier Font AR No. 12647

CONSULTANT:

PROPOSED RESIDENTIAL BUILDING

MERRICK MANOR

4133 LE JEUNE ROAD
CORAL GABLES, FLORIDA

OWNER:

DATE:
06-22-11

REVISIONS:

PROJECT No.
11-011

DRAWN BY:

CHECKED BY:
JF

SCALE:
AS SHOWN

SHEET No.
A-1.0

OF

pd Paid
2.19.11

APPENDIX B

Intersection Turning Movement Counts and Signal Timing Data

TOD Schedule Report

for 2595: Bird Rd&LeJeune Rd

Print Date: 10/19/2011

Print Time: 3:03 AM

Asset	Intersection	TOD Schedule	Op Mode	Plan #	Cycle	Offset	TOD Setting	Active PhaseBank	Active Maximum
2595	Bird Rd&LeJeune Rd	DOW-4		N/A	0	0	N/A	0	Max 0

Splits

PH 1	PH 2	PH 3	PH 4	PH 5	PH 6	PH 7	PH 8
EBL	WBT	SBL	NBT	WBL	EBT	NBL	SBT
0	0	0	0	0	0	0	0

Active Phase Bank: Phase Bank 1

Phase		Walk (Phase Bank 1 - 2 - 3)	Don't Walk (1 - 2 - 3)	Min Initial (1 - 2 - 3)	Veh Ext (1 - 2 - 3)	Max Limit (1 - 2 - 3)	Max 2 (1 - 2 - 3)	Yellow	Red
1	EBL	0 - 0 - 0	0 - 0 - 0	5 - 5 - 5	2 - 2 - 2	7 - 7 - 7	10 - 10 - 10	3	0
2	WBT	7 - 7 - 7	14 - 14 - 14	7 - 7 - 7	1 - 1 - 1	28 - 28 - 28	0 - 67 - 67	4	0.8
3	SBL	0 - 0 - 0	0 - 0 - 0	5 - 5 - 5	2 - 2 - 2	7 - 7 - 7	20 - 10 - 10	3	0
4	NBT	7 - 7 - 7	20 - 20 - 20	7 - 7 - 7	2.5 - 2.5 - 2.5	26 - 26 - 26	45 - 34 - 34	4	1.2
5	WBL	0 - 0 - 0	0 - 0 - 0	5 - 5 - 5	2 - 2 - 2	7 - 7 - 7	10 - 10 - 10	3	0
6	EBT	7 - 7 - 7	14 - 14 - 14	7 - 7 - 7	1 - 1 - 1	28 - 28 - 28	0 - 67 - 67	4	0.8
7	NBL	0 - 0 - 0	0 - 0 - 0	5 - 5 - 5	2 - 2 - 2	7 - 7 - 7	20 - 10 - 10	3	0
8	SBT	7 - 7 - 7	20 - 20 - 20	7 - 7 - 7	2.5 - 2.5 - 2.5	26 - 26 - 26	45 - 34 - 34	4	1.2

Last In Service Date: 12/22/2010 14:33

Permitted Phases

	12345678
Default	12345678
External Permit 0	-2-4-6-8
External Permit 1	-2-4-6-8
External Permit 2	-2-4-6-8

Current TOD Schedule	Plan	Cycle	Green Time 1 EBL	2 WBT	3 SBL	4 NBT	5 WBL	6 EBT	7 NBL	8 SBT	Ring Offset	Offset
	1	140	6	68	19	31	6	68	19	31	0	34
	2	100	9	32	20	23	9	32	20	23	0	74
	3	120	6	49	20	29	6	49	20	29	0	34
	4	130	6	58	20	30	6	58	20	30	0	42
	5	120	5	58	7	34	5	58	7	34	0	66
	6	130	6	65	10	33	6	65	10	33	0	16
	7	140	7	70	11	36	7	70	11	36	0	76
	8	120	6	62	10	26	6	62	10	26	0	26
	9	100	6	42	6	30	6	42	6	30	0	7
	10	110	6	52	10	26	6	52	10	26	0	6
	11	140	6	73	10	35	6	73	10	35	0	31
	12	130	6	60	10	38	6	60	10	38	0	74
	13	140	7	67	7	43	7	67	7	43	0	30
	15	140	7	72	11	34	7	72	11	34	0	128
	16	120	7	61	10	26	7	61	10	26	0	14
	17	120	6	64	8	26	6	64	8	26	0	76
	18	110	5	56	7	26	5	56	7	26	0	48
	20	80	5	28	5	26	5	28	5	26	0	52
	21	80	5	28	5	26	5	28	5	26	0	52
	22	80	5	28	5	26	5	28	5	26	0	52
	23	80	5	28	5	26	5	28	5	26	0	52

Local TOD Schedule

Time	Plan	DOW	
0000	21	Su	S
0000	Free	M T W Th F	
0115	Free	Su	S
0130	Free	M T W Th F	
0230	Free	Su	S
0500	Free	M T W Th F	
0600	6	Su	S
0600	9	M T W Th F	
0630	5	M T W Th F	
0700	11	M T W Th F	
1030	6	M T W Th F	
1500	13	M T W Th F	
2000	6	M T W Th F	
2100	9	M T W Th F	
2300	21	Su	S

Current Time of Day Function

Time	Function	Settings *	Day of Week
0000	TOD OUTPUTS	-------	SuM T W ThF S

Local Time of Day Function

Time	Function	Settings *	Day of Week
0000	TOD OUTPUTS	-------	SuM T W ThF S

*** Settings**

Blank - FREE - Phase Bank 1, Max 1
Blank - Plan - Phase Bank 1, Max 2
1 - Phase Bank 2, Max 1
2 - Phase Bank 2, Max 2
3 - Phase Bank 3, Max 1
4 - Phase Bank 3, Max 2
5 - EXTERNAL PERMIT 1
6 - EXTERNAL PERMIT 2
7 - X-PED OMIT
8 - TBA

No Calendar Defined/Enabled

TOD Schedule Report

for 3272: Altara Av&LeJeune Rd

Print Date: 10/15/2011

Print Time: 3:10 AM

Asset	Intersection	TOD Schedule	Op Mode	Plan #	Cycle	Offset	TOD Setting	Active PhaseBank	Active Maximum
3272	Altara Av&LeJeune Rd	DOW-7		N/A	0	0	N/A	0	Max 0

Splits

PH 1	PH 2	PH 3	PH 4	PH 5	PH 6	PH 7	PH 8
-	SBT	-	WBT	-	NBT	-	EBT
0	0	0	0	0	0	0	0

Active Phase Bank: Phase Bank 1

Phase		Walk (Phase Bank 1 - 2 - 3)	Don't Walk (1 - 2 - 3)	Min Initial (1 - 2 - 3)	Veh Ext (1 - 2 - 3)	Max Limit (1 - 2 - 3)	Max 2 (1 - 2 - 3)	Yellow	Red
1	-	0 - 0 - 0	0 - 0 - 0	0 - 0 - 0	0 - 0 - 0	0 - 0 - 0	0 - 0 - 0	0	0
2	SBT	0 - 0 - 0	0 - 0 - 0	16 - 16 - 16	1 - 1 - 1	40 - 40 - 40	0 - 40 - 40	4	0.1
3	-	0 - 0 - 0	0 - 0 - 0	0 - 0 - 0	0 - 0 - 0	0 - 0 - 0	0 - 0 - 0	0	0
4	WBT	0 - 0 - 0	0 - 0 - 0	7 - 7 - 7	2.5 -2.5 - 2.5	15 - 15 - 15	31 - 31 - 31	4	0.6
5	-	0 - 0 - 0	0 - 0 - 0	0 - 0 - 0	0 - 0 - 0	0 - 0 - 0	0 - 0 - 0	0	0
6	NBT	0 - 0 - 0	0 - 0 - 0	16 - 16 - 16	1 - 1 - 1	40 - 40 - 40	0 - 40 - 40	4	0.1
7	-	0 - 0 - 0	0 - 0 - 0	0 - 0 - 0	0 - 0 - 0	0 - 0 - 0	0 - 0 - 0	0	0
8	EBT	7 - 7 - 7	13 - 13 - 13	7 - 7 - 7	2.5 -2.5 - 2.5	15 - 15 - 15	31 - 31 - 31	4	0.6

Last In Service Date: unknown

Permitted Phases

	12345678
Default	-2-4-6-8
External Permit 0	--------
External Permit 1	--------
External Permit 2	--------

Current TOD Schedule	Plan	Cycle	Green Time 1 -	2 SBT	3 -	4 WBT	5 -	6 NBT	7 -	8 EBT	Ring Offset	Offset
	1	140	0	109	0	22	0	109	0	22	0	131
	2	100	0	59	0	32	0	59	0	32	0	31
	3	120	0	89	0	22	0	89	0	22	0	11
	4	130	0	100	0	21	0	100	0	21	0	103
	5	120	0	89	0	22	0	89	0	22	0	5
	6	120	0	86	0	25	0	86	0	25	0	73
	7	140	0	103	0	28	0	103	0	28	0	111
	8	120	0	89	0	22	0	89	0	22	0	103
	9	100	0	69	0	22	0	69	0	22	0	28
	10	110	0	79	0	22	0	79	0	22	0	6
	11	130	0	100	0	21	0	100	0	21	0	103
	12	130	0	99	0	22	0	99	0	22	0	63
	13	130	0	99	0	22	0	99	0	22	0	99
	15	140	0	103	0	28	0	103	0	28	0	130
	16	120	0	85	0	26	0	85	0	26	0	72
	17	120	0	85	0	26	0	85	0	26	0	22
	18	110	0	76	0	25	0	76	0	25	0	109

Local TOD Schedule

Time	Plan	DOW
0000	Free	Su M T W Th F S
0200	Flash	M T W Th F
0230	Free	Su S
0500	Free	M T W Th F
0600	Free	Su S
0600	9	M T W Th F
0700	11	M T W Th F
0930	6	M T W Th F
1500	13	M T W Th F
2000	6	M T W Th F
2100	9	M T W Th F
2300	Free	Su S

Current Time of Day Function

Time	Function	Settings *	Day of Week
0000	TOD OUTPUTS	-------	SuM T W ThF S

Local Time of Day Function

Time	Function	Settings *	Day of Week
0000	TOD OUTPUTS	-------	SuM T W ThF S

*** Settings**

Blank - FREE - Phase Bank 1, Max 1
Blank - Plan - Phase Bank 1, Max 2
1 - Phase Bank 2, Max 1
2 - Phase Bank 2, Max 2
3 - Phase Bank 3, Max 1
4 - Phase Bank 3, Max 2
5 - EXTERNAL PERMIT 1
6 - EXTERNAL PERMIT 2
7 - X-PED OMIT
8 - TBA

No Calendar Defined/Enabled

Crosroads Engineering Data, Inc.

13284 SW 120th Street
Miami, Florida, 33186
Tel: 305-233-3997 Fax: 305-233-7720

CLIENT : TRAFTECH
JOB NO : 2011-054
PROJECT: CORAL GABLES COUNTS
COUNTY : MIAMI-DADE

File Name : BIRD RD @ LE JEUNE RD
Site Code : 00000000
Start Date : 9/15/2011
Page No : 1

Groups Printed- AUTOS - HEAVY VEHICLES

	LE JEUNE RD From North				BIRD RD From East				LE JEUNE RD From South				BIRD RD From West				
Start Time	Rght	Thru	Left	Other	Rght	Thru	Left	Other	Rght	Thru	Left	Other	Rght	Thru	Left	Other	Int. Total
06:30 AM	22	114	33	1	16	102	10	0	7	89	15	3	14	225	28	0	679
06:45 AM	19	153	40	0	39	187	49	2	17	131	11	22	20	195	31	11	927
Total	41	267	73	1	55	289	59	2	24	220	26	25	34	420	59	11	1606
07:00 AM	23	198	25	0	52	201	46	10	21	139	13	0	6	242	29	80	1085
07:15 AM	9	153	52	0	23	242	16	4	20	113	16	4	11	316	28	20	1027
07:30 AM	18	150	41	0	29	231	15	0	4	128	15	0	22	300	40	0	993
07:45 AM	19	152	47	0	33	230	6	1	7	187	15	0	15	356	61	0	1129
Total	69	653	165	0	137	904	83	15	52	567	59	4	54	1214	158	100	4234
08:00 AM	11	198	62	0	26	205	14	1	7	172	31	0	17	369	89	0	1202
08:15 AM	19	223	54	0	24	212	22	0	7	161	23	0	16	387	65	0	1213
08:30 AM	14	202	63	0	22	238	45	0	7	167	28	0	14	374	85	0	1259
08:45 AM	16	205	56	0	41	259	19	0	9	209	34	1	20	373	54	0	1296
Total	60	828	235	0	113	914	100	1	30	709	116	1	67	1503	293	0	4970
09:00 AM	16	143	53	0	28	183	21	0	9	163	30	0	23	378	62	0	1109
09:15 AM	22	193	54	0	26	188	18	2	17	196	30	0	29	367	45	0	1187
*** BREAK ***																	
Total	38	336	107	0	54	371	39	2	26	359	60	0	52	745	107	0	2296
*** BREAK ***																	
02:30 PM	18	200	56	0	42	347	32	4	15	173	41	5	16	267	37	6	1259
02:45 PM	23	185	42	0	31	286	23	0	13	178	41	7	19	237	45	11	1141
Total	41	385	98	0	73	633	55	4	28	351	82	12	35	504	82	17	2400
03:00 PM	40	185	40	0	29	277	15	8	11	213	41	9	16	265	42	1	1192
03:15 PM	32	183	31	0	36	284	15	0	10	155	43	0	15	237	58	0	1099
03:30 PM	26	182	53	0	34	316	27	0	15	168	35	0	28	251	51	0	1186
03:45 PM	32	201	29	0	65	300	31	2	13	164	29	0	29	284	51	0	1230
Total	130	751	153	0	164	1177	88	10	49	700	148	9	88	1037	202	1	4707
04:00 PM	23	170	42	0	34	360	34	0	7	198	33	0	24	256	54	1	1236
04:15 PM	51	222	44	0	33	331	25	0	19	186	41	0	6	206	33	2	1199
04:30 PM	17	168	47	0	27	326	26	0	10	161	30	0	22	269	32	0	1135
04:45 PM	23	156	87	0	35	327	24	0	14	180	42	0	17	232	44	0	1181
Total	114	716	220	0	129	1344	109	0	50	725	146	0	69	963	163	3	4751

Crosroads Engineering Data, Inc.

13284 SW 120th Street
Miami, Florida, 33186
Tel: 305-233-3997 Fax: 305-233-7720

CLIENT : TRAFTECH
JOB NO : 2011-054
PROJECT: CORAL GABLES COUNTS
COUNTY : MIAMI-DADE

File Name : BIRD RD @ LE JEUNE RD
Site Code : 00000000
Start Date : 9/15/2011
Page No : 2

Groups Printed- AUTOS - HEAVY VEHICLES

	LE JEUNE RD From North				BIRD RD From East				LE JEUNE RD From South				BIRD RD From West				
Start Time	Rght	Thru	Left	Other	Rght	Thru	Left	Other	Rght	Thru	Left	Other	Rght	Thru	Left	Other	Int. Total
05:00 PM	29	214	52	0	35	399	30	1	12	195	36	0	11	274	42	0	1330
05:15 PM	37	187	36	0	46	382	17	0	21	201	44	0	26	260	31	0	1288
05:30 PM	44	219	33	0	36	289	35	0	18	186	37	0	18	270	49	0	1234
05:45 PM	46	200	36	0	39	380	22	0	12	179	30	0	24	287	38	0	1293
Total	156	820	157	0	156	1450	104	1	63	761	147	0	79	1091	160	0	5145
Grand Total	649	4756	1208	1	881	7082	637	35	322	4392	784	51	478	7477	1224	132	30109
Apprch %	9.8	71.9	18.3	0	10.2	82	7.4	0.4	5.8	79.1	14.1	0.9	5.1	80.3	13.1	1.4	
Total %	2.2	15.8	4	0	2.9	23.5	2.1	0.1	1.1	14.6	2.6	0.2	1.6	24.8	4.1	0.4	
AUTOS	639	4713	1189	1	850	7012	631	34	312	4303	751	51	462	7323	1182	132	29585
% AUTOS	98.5	99.1	98.4	100	96.5	99	99.1	97.1	96.9	98	95.8	100	96.7	97.9	96.6	100	98.3
HEAVY VEHICLES	10	43	19	0	31	70	6	1	10	89	33	0	16	154	42	0	524
% HEAVY VEHICLES	1.5	0.9	1.6	0	3.5	1	0.9	2.9	3.1	2	4.2	0	3.3	2.1	3.4	0	1.7

Crosroads Engineering Data, Inc.

13284 SW 120th Street
Miami, Florida, 33186
Tel: 305-233-3997 Fax: 305-233-7720

CLIENT : TRAFTECH
JOB NO : 2011-054
PROJECT: CORAL GABLES COUNTS
COUNTY : MIAMI-DADE

File Name : BIRD RD @ LE JEUNE RD
Site Code : 00000000
Start Date : 9/15/2011
Page No : 3

	LE JEUNE RD From North					BIRD RD From East					LE JEUNE RD From South					BIRD RD From West					
Start Time	Rght	Thru	Left	Other	App. Total	Rght	Thru	Left	Other	App. Total	Rght	Thru	Left	Other	App. Total	Rght	Thru	Left	Other	App. Total	Int. Total
Peak Hour Analysis From 06:30 AM to 09:15 AM - Peak 1 of 1																					
Peak Hour for Entire Intersection Begins at 08:00 AM																					
08:00 AM	11	198	62	0	271	26	205	14	1	246	7	172	31	0	210	17	369	89	0	475	1202
08:15 AM	19	223	54	0	296	24	212	22	0	258	7	161	23	0	191	16	387	65	0	468	1213
08:30 AM	14	202	63	0	279	22	238	45	0	305	7	167	28	0	202	14	374	85	0	473	1259
08:45 AM	16	205	56	0	277	41	259	19	0	319	9	209	34	1	253	20	373	54	0	447	1296
Total Volume	60	828	235	0	1123	113	914	100	1	1128	30	709	116	1	856	67	1503	293	0	1863	4970
% App. Total	5.3	73.7	20.9	0		10	81	8.9	0.1		3.5	82.8	13.6	0.1		3.6	80.7	15.7	0		
PHF	.789	.928	.933	.000	.948	.689	.882	.556	.250	.884	.833	.848	.853	.250	.846	.838	.971	.823	.000	.981	.959

Crosroads Engineering Data, Inc.

13284 SW 120th Street
Miami, Florida, 33186
Tel: 305-233-3997 Fax: 305-233-7720

CLIENT : TRAFTECH
JOB NO : 2011-054
PROJECT: CORAL GABLES COUNTS
COUNTY : MIAMI-DADE

File Name : BIRD RD @ LE JEUNE RD
Site Code : 00000000
Start Date : 9/15/2011
Page No : 4

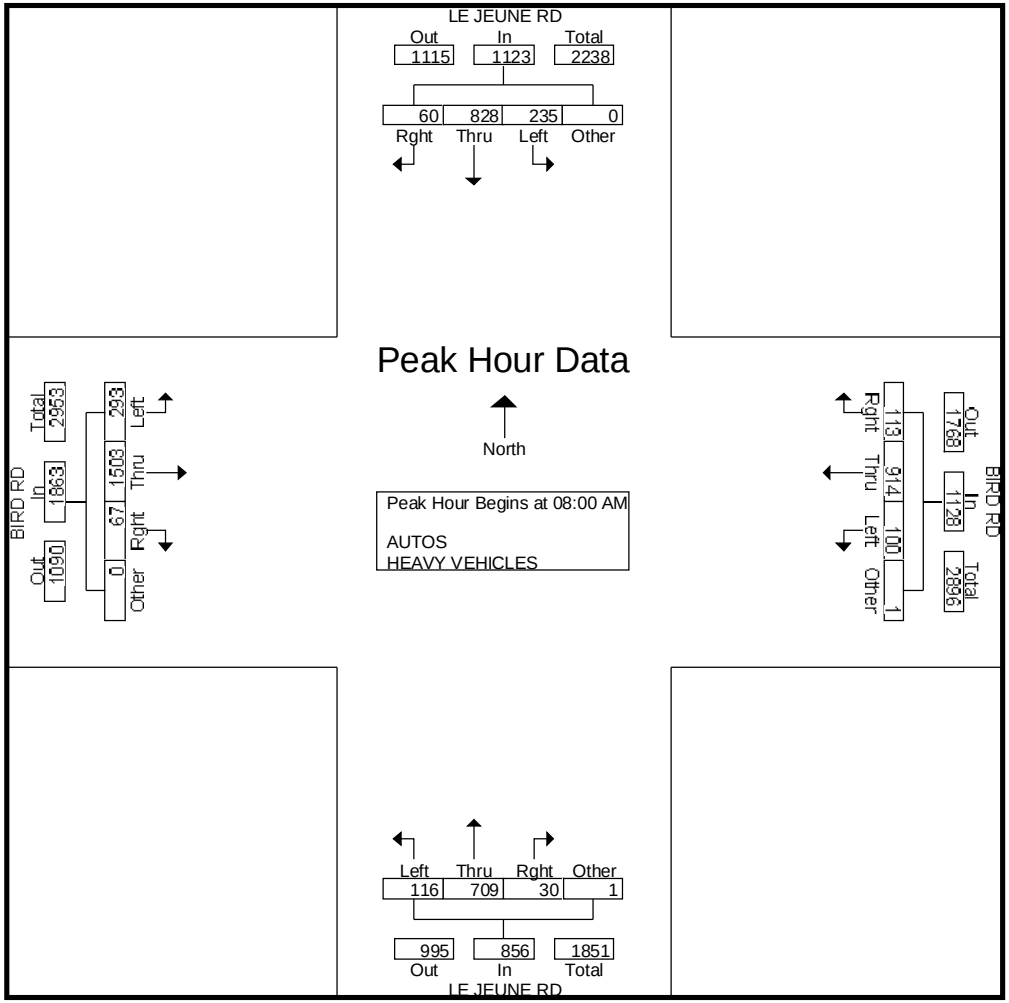

Crosroads Engineering Data, Inc.

13284 SW 120th Street
Miami, Florida, 33186
Tel: 305-233-3997 Fax: 305-233-7720

CLIENT : TRAFTECH
JOB NO : 2011-054
PROJECT: CORAL GABLES COUNTS
COUNTY : MIAMI-DADE

File Name : BIRD RD @ LE JEUNE RD
Site Code : 00000000
Start Date : 9/15/2011
Page No : 5

	LE JEUNE RD From North					BIRD RD From East					LE JEUNE RD From South					BIRD RD From West					
Start Time	Rght	Thru	Left	Other	App. Total	Rght	Thru	Left	Other	App. Total	Rght	Thru	Left	Other	App. Total	Rght	Thru	Left	Other	App. Total	Int. Total
Peak Hour Analysis From 02:30 PM to 05:45 PM - Peak 1 of 1																					
Peak Hour for Entire Intersection Begins at 05:00 PM																					
05:00 PM	29	214	52	0	295	35	399	30	1	465	12	195	36	0	243	11	274	42	0	327	1330
05:15 PM	37	187	36	0	260	46	382	17	0	445	21	201	44	0	266	26	260	31	0	317	1288
05:30 PM	44	219	33	0	296	36	289	35	0	360	18	186	37	0	241	18	270	49	0	337	1234
05:45 PM	46	200	36	0	282	39	380	22	0	441	12	179	30	0	221	24	287	38	0	349	1293
Total Volume	156	820	157	0	1133	156	1450	104	1	1711	63	761	147	0	971	79	1091	160	0	1330	5145
% App. Total	13.8	72.4	13.9	0		9.1	84.7	6.1	0.1		6.5	78.4	15.1	0		5.9	82	12	0		
PHF	.848	.936	.755	.000	.957	.848	.909	.743	.250	.920	.750	.947	.835	.000	.913	.760	.950	.816	.000	.953	.967

Crosroads Engineering Data, Inc.

13284 SW 120th Street
Miami, Florida, 33186
Tel: 305-233-3997 Fax: 305-233-7720

CLIENT : TRAFTECH
JOB NO : 2011-054
PROJECT: CORAL GABLES COUNTS
COUNTY : MIAMI-DADE

File Name : BIRD RD @ LE JEUNE RD
Site Code : 00000000
Start Date : 9/15/2011
Page No : 6

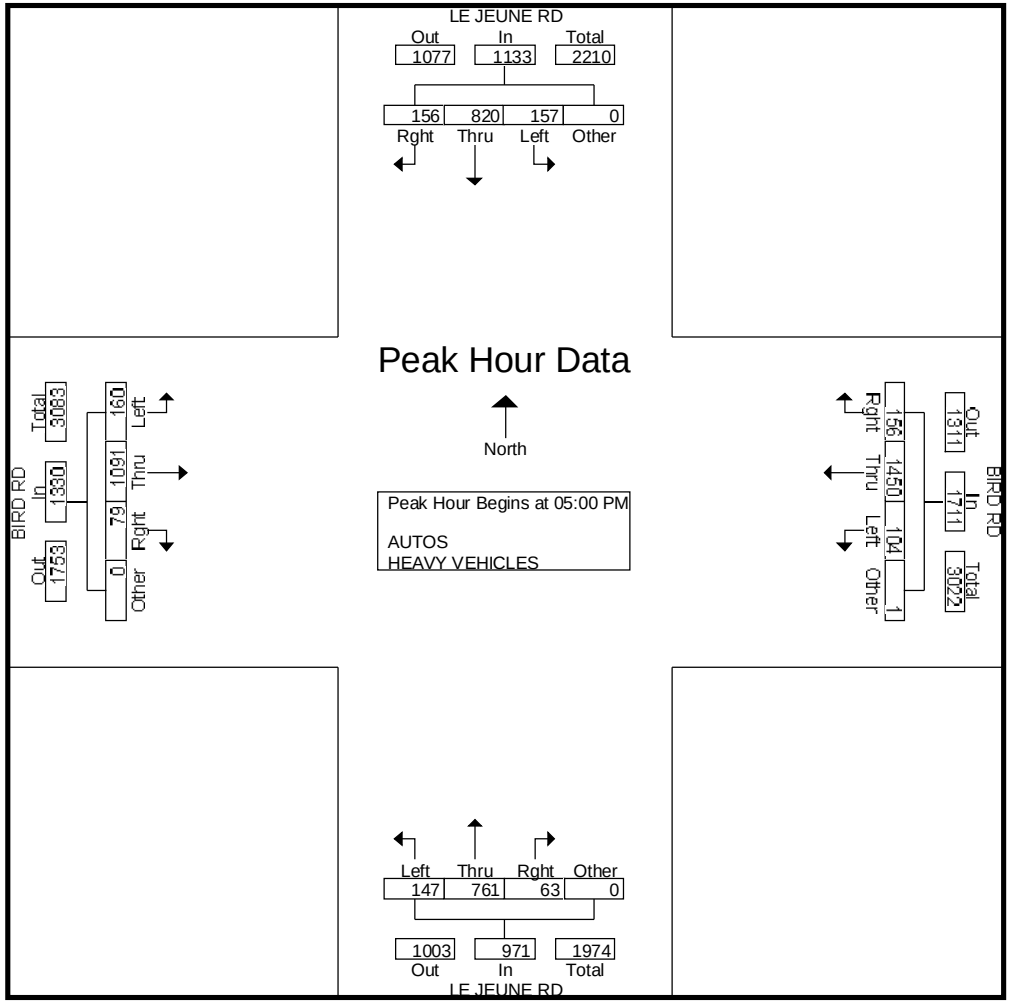

Crosroads Engineering Data, Inc.

13284 SW 120th Street
Miami, Florida, 33186
Tel: 305-233-3997 Fax: 305-233-7720

CLIENT : TRAFTECH
JOB NO : 2011-054
PROJECT: CORAL GABLES COUNTS
COUNTY : MIAMI-DADE

File Name : BIRD RD @ LE JEUNE RD
Site Code : 00000000
Start Date : 9/15/2011
Page No : 1

Groups Printed- HEAVY VEHICLES

	LE JEUNE RD From North				BIRD RD From East				LE JEUNE RD From South				BIRD RD From West				
Start Time	Rght	Thru	Left	Other	Rght	Thru	Left	Other	Rght	Thru	Left	Other	Rght	Thru	Left	Other	Int. Total
06:30 AM	1	2	1	0	4	7	0	0	0	1	1	0	1	8	0	0	26
06:45 AM	0	2	2	0	5	2	0	1	1	2	2	0	3	7	4	0	31
Total	1	4	3	0	9	9	0	1	1	3	3	0	4	15	4	0	57
07:00 AM	0	0	1	0	1	3	0	0	0	0	1	0	1	10	5	0	22
07:15 AM	0	1	0	0	2	3	0	0	1	1	0	0	0	8	2	0	18
07:30 AM	3	4	1	0	4	2	0	0	0	5	0	0	2	4	0	0	25
07:45 AM	1	6	2	0	1	3	0	0	1	3	1	0	1	8	0	0	27
Total	4	11	4	0	8	11	0	0	2	9	2	0	4	30	7	0	92
08:00 AM	0	1	1	0	0	2	1	0	0	1	2	0	1	5	0	0	14
08:15 AM	0	4	3	0	0	4	1	0	0	7	1	0	1	4	0	0	25
08:30 AM	0	4	0	0	0	4	0	0	0	0	2	0	0	5	0	0	15
08:45 AM	0	0	1	0	0	2	0	0	0	2	1	0	2	4	2	0	14
Total	0	9	5	0	0	12	2	0	0	10	6	0	4	18	2	0	68
09:00 AM	0	0	0	0	0	3	0	0	0	7	2	0	0	7	7	0	26
09:15 AM	1	4	1	0	0	2	0	0	1	6	0	0	1	4	2	0	22
*** BREAK ***																	
Total	1	4	1	0	0	5	0	0	1	13	2	0	1	11	9	0	48
*** BREAK ***																	
02:30 PM	0	3	0	0	2	2	0	0	1	2	1	0	1	11	11	0	34
02:45 PM	0	1	1	0	1	3	0	0	1	6	2	0	1	9	2	0	27
Total	0	4	1	0	3	5	0	0	2	8	3	0	2	20	13	0	61
03:00 PM	1	2	0	0	0	3	1	0	0	5	4	0	0	5	0	0	21
03:15 PM	1	2	2	0	1	5	1	0	1	1	2	0	0	6	1	0	23
03:30 PM	0	1	0	0	3	5	1	0	1	4	1	0	0	9	0	0	25
03:45 PM	0	1	0	0	0	3	0	0	0	3	1	0	0	7	1	0	16
Total	2	6	2	0	4	16	3	0	2	13	8	0	0	27	2	0	85
04:00 PM	0	1	1	0	1	2	1	0	1	5	2	0	0	6	0	0	20
04:15 PM	1	0	0	0	0	2	0	0	1	3	0	0	0	3	2	0	12
04:30 PM	0	2	0	0	1	2	0	0	0	7	0	0	0	6	0	0	18
04:45 PM	1	1	0	0	1	1	0	0	0	3	1	0	0	7	1	0	16
Total	2	4	1	0	3	7	1	0	2	18	3	0	0	22	3	0	66

Crosroads Engineering Data, Inc.

13284 SW 120th Street
Miami, Florida, 33186
Tel: 305-233-3997 Fax: 305-233-7720

CLIENT : TRAFTECH
JOB NO : 2011-054
PROJECT: CORAL GABLES COUNTS
COUNTY : MIAMI-DADE

File Name : BIRD RD @ LE JEUNE RD
Site Code : 00000000
Start Date : 9/15/2011
Page No : 2

Groups Printed- HEAVY VEHICLES

	LE JEUNE RD From North				BIRD RD From East				LE JEUNE RD From South				BIRD RD From West				
Start Time	Rght	Thru	Left	Other	Rght	Thru	Left	Other	Rght	Thru	Left	Other	Rght	Thru	Left	Other	Int. Total
05:00 PM	0	1	0	0	1	2	0	0	0	9	2	0	0	3	0	0	18
05:15 PM	0	0	0	0	2	2	0	0	0	0	0	0	1	3	0	0	8
05:30 PM	0	0	0	0	0	0	0	0	0	3	2	0	0	2	1	0	8
05:45 PM	0	0	2	0	1	1	0	0	0	3	2	0	0	3	1	0	13
Total	0	1	2	0	4	5	0	0	0	15	6	0	1	11	2	0	47
Grand Total	10	43	19	0	31	70	6	1	10	89	33	0	16	154	42	0	524
Apprch %	13.9	59.7	26.4	0	28.7	64.8	5.6	0.9	7.6	67.4	25	0	7.5	72.6	19.8	0	
Total %	1.9	8.2	3.6	0	5.9	13.4	1.1	0.2	1.9	17	6.3	0	3.1	29.4	8	0	

Crosroads Engineering Data, Inc.

13284 SW 120th Street
Miami, Florida, 33186
Tel: 305-233-3997 Fax: 305-233-7720

CLIENT : TRAFTECH
JOB NO : 2011-054
PROJECT: CORAL GABLES COUNTS
COUNTY : MIAMI-DADE

File Name : BIRD RD @ SALZEDO
Site Code : 00000000
Start Date : 9/15/2011
Page No : 1

Groups Printed- AUTOS - HEAVY VEHICLES

	SALZEDO ST From North				BIRD RD From East				SALZEDO ST From South				BIRD RD From West				
Start Time	Rght	Thru	Left	Other	Rght	Thru	Left	Other	Rght	Thru	Left	Other	Rght	Thru	Left	Other	Int. Total
06:30 AM	1	0	0	1	0	158	0	0	2	0	0	7	0	280	0	2	451
06:45 AM	3	0	0	1	1	222	0	1	9	0	2	22	0	252	0	2	515
Total	4	0	0	2	1	380	0	1	11	0	2	29	0	532	0	4	966
07:00 AM	6	0	0	2	3	331	2	2	22	0	1	5	1	317	0	1	693
07:15 AM	0	0	0	0	2	277	0	1	10	0	0	4	2	371	0	0	667
07:30 AM	0	0	0	0	6	305	0	0	0	0	2	3	3	333	0	0	652
07:45 AM	5	0	0	0	0	296	0	1	4	0	0	2	1	402	0	0	711
Total	11	0	0	2	11	1209	2	4	36	0	3	14	7	1423	0	1	2723
08:00 AM	7	0	0	2	1	280	0	1	1	0	2	13	2	450	0	0	759
08:15 AM	5	0	0	0	1	245	0	0	3	0	1	0	2	391	0	1	649
08:30 AM	0	0	0	0	1	283	0	1	7	0	0	3	6	391	0	0	692
08:45 AM	4	0	0	0	1	279	0	0	1	0	1	2	3	413	0	1	705
Total	16	0	0	2	4	1087	0	2	12	0	4	18	13	1645	0	2	2805
09:00 AM	2	0	0	1	1	220	0	0	1	0	2	8	2	442	0	1	680
09:15 AM	1	0	0	0	0	208	0	0	3	0	1	0	4	427	0	1	645
*** BREAK ***																	
Total	3	0	0	1	1	428	0	0	4	0	3	8	6	869	0	2	1325
*** BREAK ***																	
02:30 PM	2	0	0	6	5	349	1	4	26	0	3	94	5	284	0	0	779
02:45 PM	7	0	0	1	3	357	0	0	8	0	1	17	3	290	0	0	687
Total	9	0	0	7	8	706	1	4	34	0	4	111	8	574	0	0	1466
03:00 PM	3	0	0	2	2	296	1	1	12	0	0	14	7	301	0	0	639
03:15 PM	2	0	0	1	2	376	0	0	4	0	2	7	3	282	0	0	679
03:30 PM	4	0	0	0	1	394	0	2	8	0	2	6	7	287	0	1	712
03:45 PM	7	0	0	1	1	422	0	1	5	0	5	3	3	259	0	0	707
Total	16	0	0	4	6	1488	1	4	29	0	9	30	20	1129	0	1	2737
04:00 PM	1	0	0	0	1	397	0	0	1	0	0	2	2	312	0	0	716
04:15 PM	2	0	0	1	4	420	0	0	1	0	4	5	5	256	0	0	698
04:30 PM	2	0	0	0	16	382	0	2	11	0	4	29	6	288	0	0	740
04:45 PM	2	0	0	0	2	423	0	0	4	0	1	5	6	308	0	0	751
Total	7	0	0	1	23	1622	0	2	17	0	9	41	19	1164	0	0	2905

Crosroads Engineering Data, Inc.

13284 SW 120th Street
Miami, Florida, 33186
Tel: 305-233-3997 Fax: 305-233-7720

CLIENT : TRAFTECH
JOB NO : 2011-054
PROJECT: CORAL GABLES COUNTS
COUNTY : MIAMI-DADE

File Name : BIRD RD @ SALZEDO
Site Code : 00000000
Start Date : 9/15/2011
Page No : 2

Groups Printed- AUTOS - HEAVY VEHICLES

	SALZEDO ST From North				BIRD RD From East				SALZEDO ST From South				BIRD RD From West				
Start Time	Rght	Thru	Left	Other	Rght	Thru	Left	Other	Rght	Thru	Left	Other	Rght	Thru	Left	Other	Int. Total
05:00 PM	11	0	0	1	2	477	0	1	10	0	6	2	7	273	0	0	790
05:15 PM	6	0	0	0	0	452	0	2	6	0	4	1	7	328	0	2	808
05:30 PM	7	0	0	3	3	474	1	0	5	0	3	21	1	292	0	1	811
05:45 PM	4	0	0	0	4	386	0	3	3	0	1	5	5	294	0	1	706
Total	28	0	0	4	9	1789	1	6	24	0	14	29	20	1187	0	4	3115
Grand Total	94	0	0	23	63	8709	5	23	167	0	48	280	93	8523	0	14	18042
Apprch %	80.3	0	0	19.7	0.7	99	0.1	0.3	33.7	0	9.7	56.6	1.1	98.8	0	0.2	
Total %	0.5	0	0	0.1	0.3	48.3	0	0.1	0.9	0	0.3	1.6	0.5	47.2	0	0.1	
AUTOS	94	0	0	23	63	8709	5	23	167	0	48	280	93	8523	0	14	18042
% AUTOS	100	0	0	100	100	100	100	100	100	0	100	100	100	100	0	100	100
HEAVY VEHICLES	0	0	0	0	0	0	0	0	0	0	0	0	0	0	0	0	0
% HEAVY VEHICLES	0	0	0	0	0	0	0	0	0	0	0	0	0	0	0	0	0

Crosroads Engineering Data, Inc.

13284 SW 120th Street
Miami, Florida, 33186
Tel: 305-233-3997 Fax: 305-233-7720

CLIENT : TRAFTECH
JOB NO : 2011-054
PROJECT: CORAL GABLES COUNTS
COUNTY : MIAMI-DADE

File Name : BIRD RD @ SALZEDO
Site Code : 00000000
Start Date : 9/15/2011
Page No : 3

	SALZEDO ST From North					BIRD RD From East					SALZEDO ST From South					BIRD RD From West					
Start Time	Rght	Thru	Left	Other	App. Total	Rght	Thru	Left	Other	App. Total	Rght	Thru	Left	Other	App. Total	Rght	Thru	Left	Other	App. Total	Int. Total
Peak Hour Analysis From 06:30 AM to 09:15 AM - Peak 1 of 1																					
Peak Hour for Entire Intersection Begins at 07:45 AM																					
07:45 AM	5	0	0	0	5	0	296	0	1	297	4	0	0	2	6	1	402	0	0	403	711
08:00 AM	7	0	0	2	9	1	280	0	1	282	1	0	2	13	16	2	450	0	0	452	759
08:15 AM	5	0	0	0	5	1	245	0	0	246	3	0	1	0	4	2	391	0	1	394	649
08:30 AM	0	0	0	0	0	1	283	0	1	285	7	0	0	3	10	6	391	0	0	397	692
Total Volume	17	0	0	2	19	3	1104	0	3	1110	15	0	3	18	36	11	1634	0	1	1646	2811
% App. Total	89.5	0	0	10.5		0.3	99.5	0	0.3		41.7	0	8.3	50		0.7	99.3	0	0.1		
PHF	.607	.000	.000	.250	.528	.750	.932	.000	.750	.934	.536	.000	.375	.346	.563	.458	.908	.000	.250	.910	.926

Crosroads Engineering Data, Inc.

13284 SW 120th Street
Miami, Florida, 33186
Tel: 305-233-3997 Fax: 305-233-7720

CLIENT : TRAFTECH
JOB NO : 2011-054
PROJECT: CORAL GABLES COUNTS
COUNTY : MIAMI-DADE

File Name : BIRD RD @ SALZEDO
Site Code : 00000000
Start Date : 9/15/2011
Page No : 4

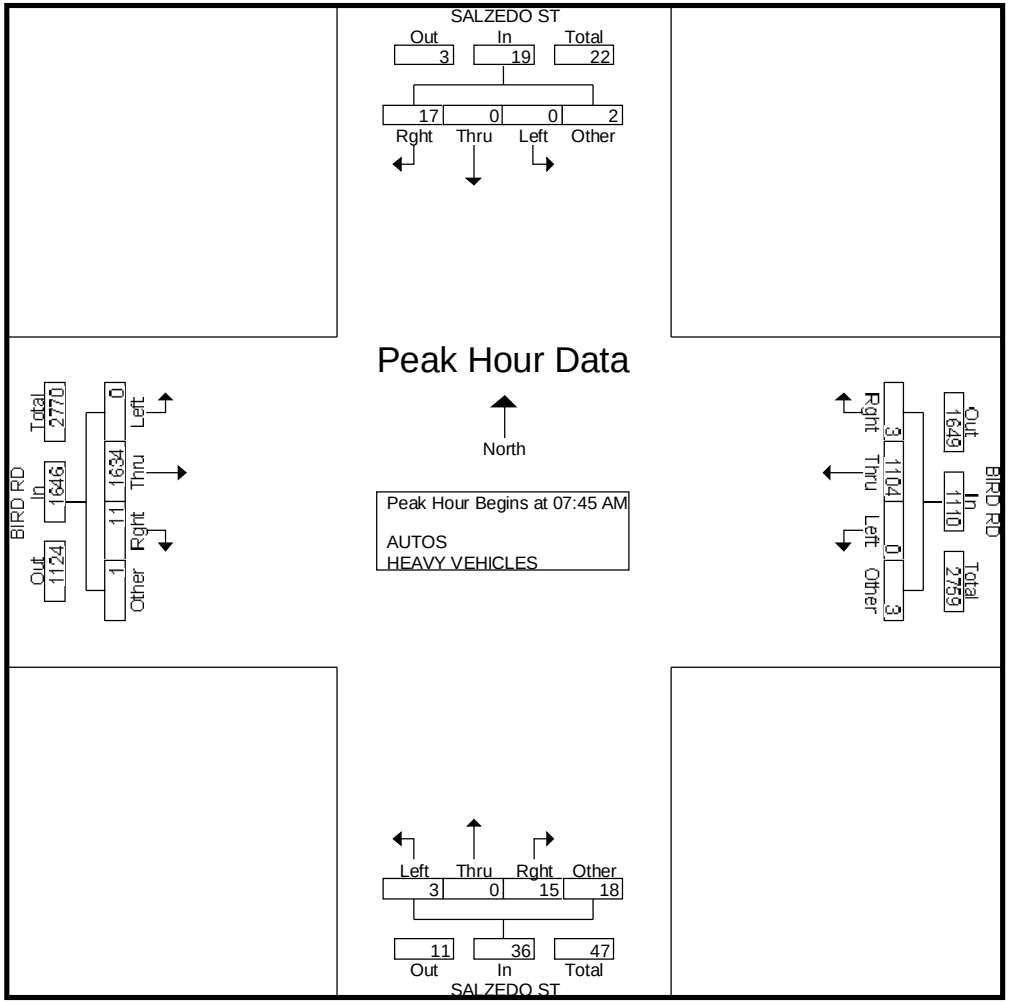

Crosroads Engineering Data, Inc.

13284 SW 120th Street
Miami, Florida, 33186
Tel: 305-233-3997 Fax: 305-233-7720

CLIENT : TRAFTECH
JOB NO : 2011-054
PROJECT: CORAL GABLES COUNTS
COUNTY : MIAMI-DADE

File Name : BIRD RD @ SALZEDO
Site Code : 00000000
Start Date : 9/15/2011
Page No : 5

	SALZEDO ST From North					BIRD RD From East					SALZEDO ST From South					BIRD RD From West					
Start Time	Rght	Thru	Left	Other	App. Total	Rght	Thru	Left	Other	App. Total	Rght	Thru	Left	Other	App. Total	Rght	Thru	Left	Other	App. Total	Int. Total
Peak Hour Analysis From 02:30 PM to 05:45 PM - Peak 1 of 1																					
Peak Hour for Entire Intersection Begins at 04:45 PM																					
04:45 PM	2	0	0	0	2	2	423	0	0	425	4	0	1	5	10	6	308	0	0	314	751
05:00 PM	11	0	0	1	12	2	477	0	1	480	10	0	6	2	18	7	273	0	0	280	790
05:15 PM	6	0	0	0	6	0	452	0	2	454	6	0	4	1	11	7	328	0	2	337	808
05:30 PM	7	0	0	3	10	3	474	1	0	478	5	0	3	21	29	1	292	0	1	294	811
Total Volume	26	0	0	4	30	7	1826	1	3	1837	25	0	14	29	68	21	1201	0	3	1225	3160
% App. Total	86.7	0	0	13.3		0.4	99.4	0.1	0.2		36.8	0	20.6	42.6		1.7	98	0	0.2		
PHF	.591	.000	.000	.333	.625	.583	.957	.250	.375	.957	.625	.000	.583	.345	.586	.750	.915	.000	.375	.909	.974

Crosroads Engineering Data, Inc.
13284 SW 120th Street
Miami, Florida, 33186
Tel: 305-233-3997 Fax: 305-233-7720

CLIENT : TRAFTECH
JOB NO : 2011-054
PROJECT: CORAL GABLES COUNTS
COUNTY : MIAMI-DADE

File Name : BIRD RD @ SALZEDO
Site Code : 00000000
Start Date : 9/15/2011
Page No : 6

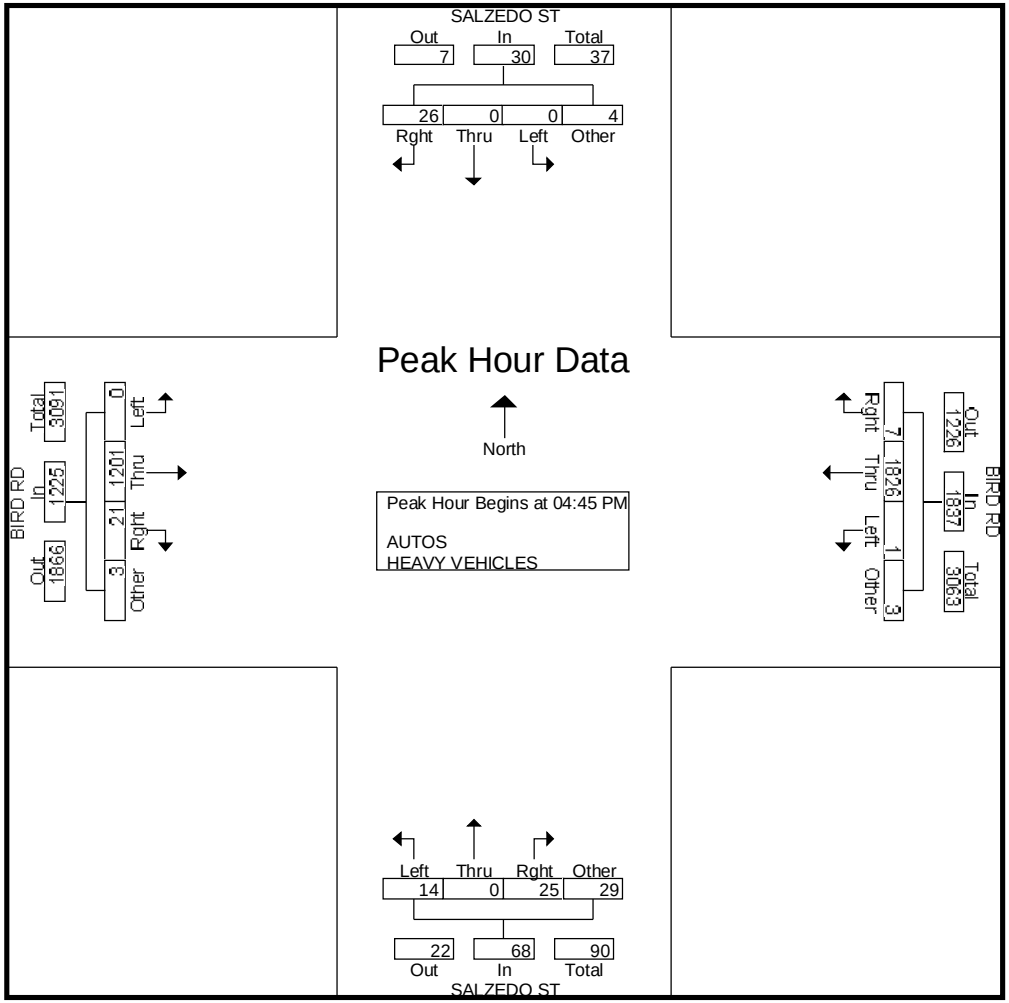

Crosroads Engineering Data, Inc.

13284 SW 120th Street
Miami, Florida, 33186
Tel: 305-233-3997 Fax: 305-233-7720

CLIENT : TRAFTECH
JOB NO : 2011-054
PROJECT: CORAL GABLES COUNTS
COUNTY : MIAMI-DADE

File Name : ALTARA @ LE JEUNE RD
Site Code : 00000000
Start Date : 9/15/2011
Page No : 1

Groups Printed- AUTOS - HEAVY VEHICLES

	LE JEUNE RD From North				ALTARA AVE From East				LE JEUNE RD From South				GABLES HIGH DW From West				
Start Time	Rght	Thru	Left	Other	Rght	Thru	Left	Other	Rght	Thru	Left	Other	Rght	Thru	Left	Other	Int. Total
06:30 AM	32	107	9	13	8	2	3	0	4	90	14	7	0	0	10	0	299
06:45 AM	32	132	25	100	29	13	11	14	20	132	32	62	0	1	3	0	606
Total	64	239	34	113	37	15	14	14	24	222	46	69	0	1	13	0	905
07:00 AM	9	146	29	133	32	1	19	0	44	173	14	219	0	0	1	0	820
07:15 AM	0	170	12	63	18	0	13	4	15	137	0	69	0	0	0	0	501
07:30 AM	0	149	3	2	3	0	8	0	9	162	0	7	0	0	0	0	343
07:45 AM	0	217	9	5	7	0	23	2	15	206	0	5	0	0	0	0	489
Total	9	682	53	203	60	1	63	6	83	678	14	300	0	0	1	0	2153
08:00 AM	0	207	12	3	12	0	5	4	12	172	1	1	0	0	0	0	429
08:15 AM	0	226	14	0	13	0	6	0	9	206	1	3	0	0	0	0	478
08:30 AM	0	215	24	1	6	0	4	1	14	224	1	3	0	0	0	0	493
08:45 AM	0	212	18	0	6	0	19	1	17	260	0	9	0	0	0	0	542
Total	0	860	68	4	37	0	34	6	52	862	3	16	0	0	0	0	1942
09:00 AM	0	203	30	0	15	0	30	7	15	206	0	9	0	0	0	0	515
09:15 AM	0	184	4	0	11	0	21	0	18	246	1	2	0	0	0	0	487
*** BREAK ***																	
Total	0	387	34	0	26	0	51	7	33	452	1	11	0	0	0	0	1002
*** BREAK ***																	
02:30 PM	0	206	19	1	20	0	12	0	17	175	0	178	0	0	0	0	628
02:45 PM	0	211	14	0	15	1	27	12	20	263	0	102	0	0	0	0	665
Total	0	417	33	1	35	1	39	12	37	438	0	280	0	0	0	0	1293
03:00 PM	0	198	14	5	13	1	27	9	14	212	2	46	0	0	0	0	541
03:15 PM	0	205	4	2	29	0	24	3	17	211	1	29	0	0	0	0	525
03:30 PM	0	236	9	1	21	0	14	0	13	283	0	18	0	0	0	0	595
03:45 PM	0	243	13	1	16	0	21	2	15	194	3	13	0	0	0	0	521
Total	0	882	40	9	79	1	86	14	59	900	6	106	0	0	0	0	2182
04:00 PM	4	220	13	0	24	3	23	0	13	255	1	28	0	0	2	0	586
04:15 PM	6	201	16	4	20	6	10	0	10	214	2	14	1	0	2	0	506
04:30 PM	5	259	15	0	25	3	29	20	6	209	1	14	4	2	14	1	607
04:45 PM	5	191	16	5	13	1	30	2	11	226	3	24	3	2	6	0	538
Total	20	871	60	9	82	13	92	22	40	904	7	80	8	4	24	1	2237

Crosroads Engineering Data, Inc.

13284 SW 120th Street
Miami, Florida, 33186
Tel: 305-233-3997 Fax: 305-233-7720

CLIENT : TRAFTECH
JOB NO : 2011-054
PROJECT: CORAL GABLES COUNTS
COUNTY : MIAMI-DADE

File Name : ALTARA @ LE JEUNE RD
Site Code : 00000000
Start Date : 9/15/2011
Page No : 2

Groups Printed- AUTOS - HEAVY VEHICLES

	LE JEUNE RD From North				ALTARA AVE From East				LE JEUNE RD From South				GABLES HIGH DW From West				
Start Time	Rght	Thru	Left	Other	Rght	Thru	Left	Other	Rght	Thru	Left	Other	Rght	Thru	Left	Other	Int. Total
05:00 PM	10	233	9	2	38	1	32	0	16	199	7	6	3	0	2	0	558
05:15 PM	10	240	13	1	45	6	31	4	17	209	5	7	4	4	9	0	605
05:30 PM	18	238	7	2	46	9	22	26	10	245	3	8	5	2	7	0	648
05:45 PM	22	221	13	3	27	10	27	0	10	218	10	1	4	5	7	0	578
Total	60	932	42	8	156	26	112	30	53	871	25	22	16	11	25	0	2389
Grand Total	153	5270	364	347	512	57	491	111	381	5327	102	884	24	16	63	1	14103
Apprch %	2.5	85.9	5.9	5.7	43.7	4.9	41.9	9.5	5.7	79.6	1.5	13.2	23.1	15.4	60.6	1	
Total %	1.1	37.4	2.6	2.5	3.6	0.4	3.5	0.8	2.7	37.8	0.7	6.3	0.2	0.1	0.4	0	
AUTOS	152	5147	352	347	501	57	484	111	376	5227	102	884	24	16	61	1	13842
% AUTOS	99.3	97.7	96.7	100	97.9	100	98.6	100	98.7	98.1	100	100	100	100	96.8	100	98.1
HEAVY VEHICLES	1	123	12	0	11	0	7	0	5	100	0	0	0	0	2	0	261
% HEAVY VEHICLES	0.7	2.3	3.3	0	2.1	0	1.4	0	1.3	1.9	0	0	0	0	3.2	0	1.9

Crosroads Engineering Data, Inc.

13284 SW 120th Street
Miami, Florida, 33186
Tel: 305-233-3997 Fax: 305-233-7720

CLIENT : TRAFTECH
JOB NO : 2011-054
PROJECT: CORAL GABLES COUNTS
COUNTY : MIAMI-DADE

File Name : ALTARA @ LE JEUNE RD
Site Code : 00000000
Start Date : 9/15/2011
Page No : 3

	LE JEUNE RD From North					ALTARA AVE From East					LE JEUNE RD From South					GABLES HIGH DW From West					
Start Time	Rght	Thru	Left	Other	App. Total	Rght	Thru	Left	Other	App. Total	Rght	Thru	Left	Other	App. Total	Rght	Thru	Left	Other	App. Total	Int. Total
Peak Hour Analysis From 06:30 AM to 09:15 AM - Peak 1 of 1																					
Peak Hour for Entire Intersection Begins at 06:45 AM																					
06:45 AM	32	132	25	100	289	29	13	11	14	67	20	132	32	62	246	0	1	3	0	4	606
07:00 AM	9	146	29	133	317	32	1	19	0	52	44	173	14	219	450	0	0	1	0	1	820
07:15 AM	0	170	12	63	245	18	0	13	4	35	15	137	0	69	221	0	0	0	0	0	501
07:30 AM	0	149	3	2	154	3	0	8	0	11	9	162	0	7	178	0	0	0	0	0	343
Total Volume	41	597	69	298	1005	82	14	51	18	165	88	604	46	357	1095	0	1	4	0	5	2270
% App. Total	4.1	59.4	6.9	29.7		49.7	8.5	30.9	10.9		8	55.2	4.2	32.6		0	20	80	0		
PHF	.320	.878	.595	.560	.793	.641	.269	.671	.321	.616	.500	.873	.359	.408	.608	.000	.250	.333	.000	.313	.692

Crosroads Engineering Data, Inc.

13284 SW 120th Street
Miami, Florida, 33186
Tel: 305-233-3997 Fax: 305-233-7720

CLIENT : TRAFTECH
JOB NO : 2011-054
PROJECT: CORAL GABLES COUNTS
COUNTY : MIAMI-DADE

File Name : ALTARA @ LE JEUNE RD
Site Code : 00000000
Start Date : 9/15/2011
Page No : 4

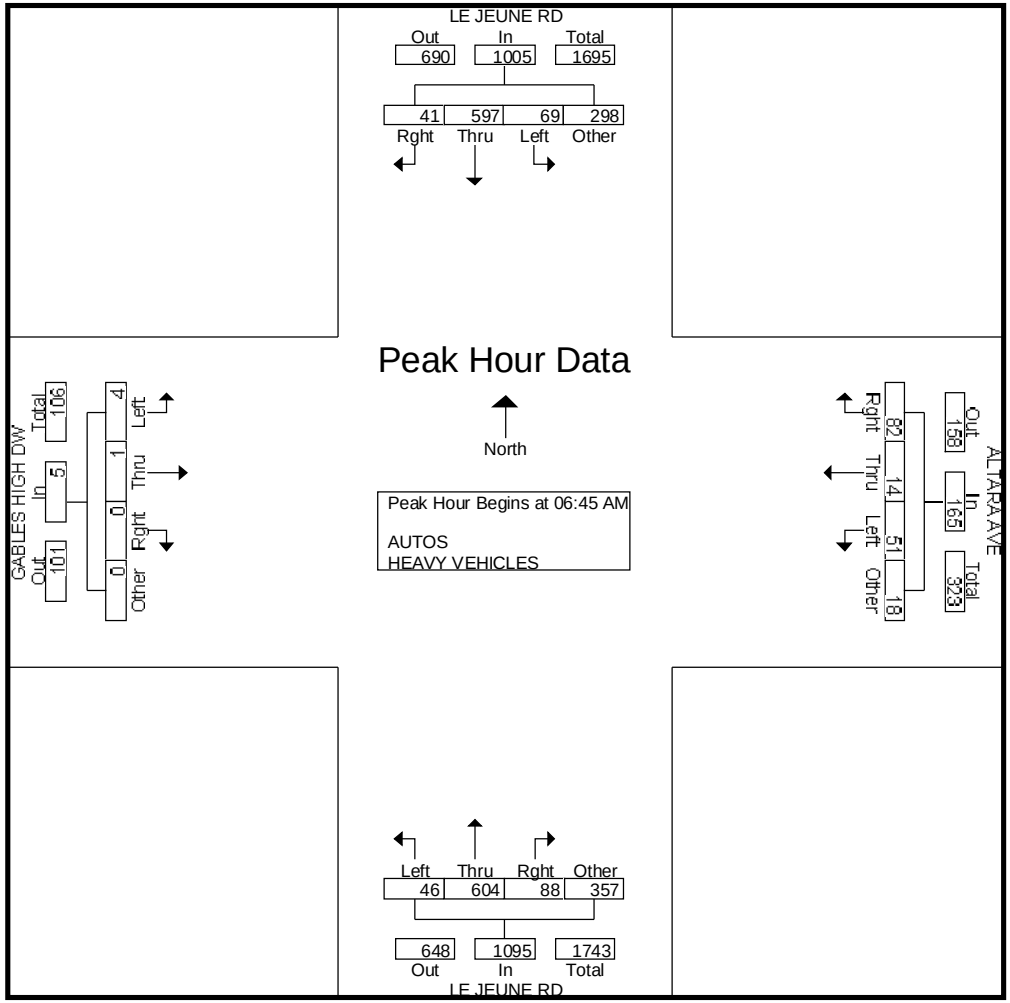

Crosroads Engineering Data, Inc.

13284 SW 120th Street
Miami, Florida, 33186
Tel: 305-233-3997 Fax: 305-233-7720

CLIENT : TRAFTECH
JOB NO : 2011-054
PROJECT: CORAL GABLES COUNTS
COUNTY : MIAMI-DADE

File Name : ALTARA @ LE JEUNE RD
Site Code : 00000000
Start Date : 9/15/2011
Page No : 5

	LE JEUNE RD From North					ALTARA AVE From East					LE JEUNE RD From South					GABLES HIGH DW From West					
Start Time	Rght	Thru	Left	Other	App. Total	Rght	Thru	Left	Other	App. Total	Rght	Thru	Left	Other	App. Total	Rght	Thru	Left	Other	App. Total	Int. Total
Peak Hour Analysis From 02:30 PM to 05:45 PM - Peak 1 of 1																					
Peak Hour for Entire Intersection Begins at 05:00 PM																					
05:00 PM	10	233	9	2	254	38	1	32	0	71	16	199	7	6	228	3	0	2	0	5	558
05:15 PM	10	240	13	1	264	45	6	31	4	86	17	209	5	7	238	4	4	9	0	17	605
05:30 PM	18	238	7	2	265	46	9	22	26	103	10	245	3	8	266	5	2	7	0	14	648
05:45 PM	22	221	13	3	259	27	10	27	0	64	10	218	10	1	239	4	5	7	0	16	578
Total Volume	60	932	42	8	1042	156	26	112	30	324	53	871	25	22	971	16	11	25	0	52	2389
% App. Total	5.8	89.4	4	0.8		48.1	8	34.6	9.3		5.5	89.7	2.6	2.3		30.8	21.2	48.1	0		
PHF	.682	.971	.808	.667	.983	.848	.650	.875	.288	.786	.779	.889	.625	.688	.913	.800	.550	.694	.000	.765	.922

Crosroads Engineering Data, Inc.

13284 SW 120th Street
Miami, Florida, 33186
Tel: 305-233-3997 Fax: 305-233-7720

CLIENT : TRAFTECH
JOB NO : 2011-054
PROJECT: CORAL GABLES COUNTS
COUNTY : MIAMI-DADE

File Name : ALTARA @ LE JEUNE RD
Site Code : 00000000
Start Date : 9/15/2011
Page No : 6

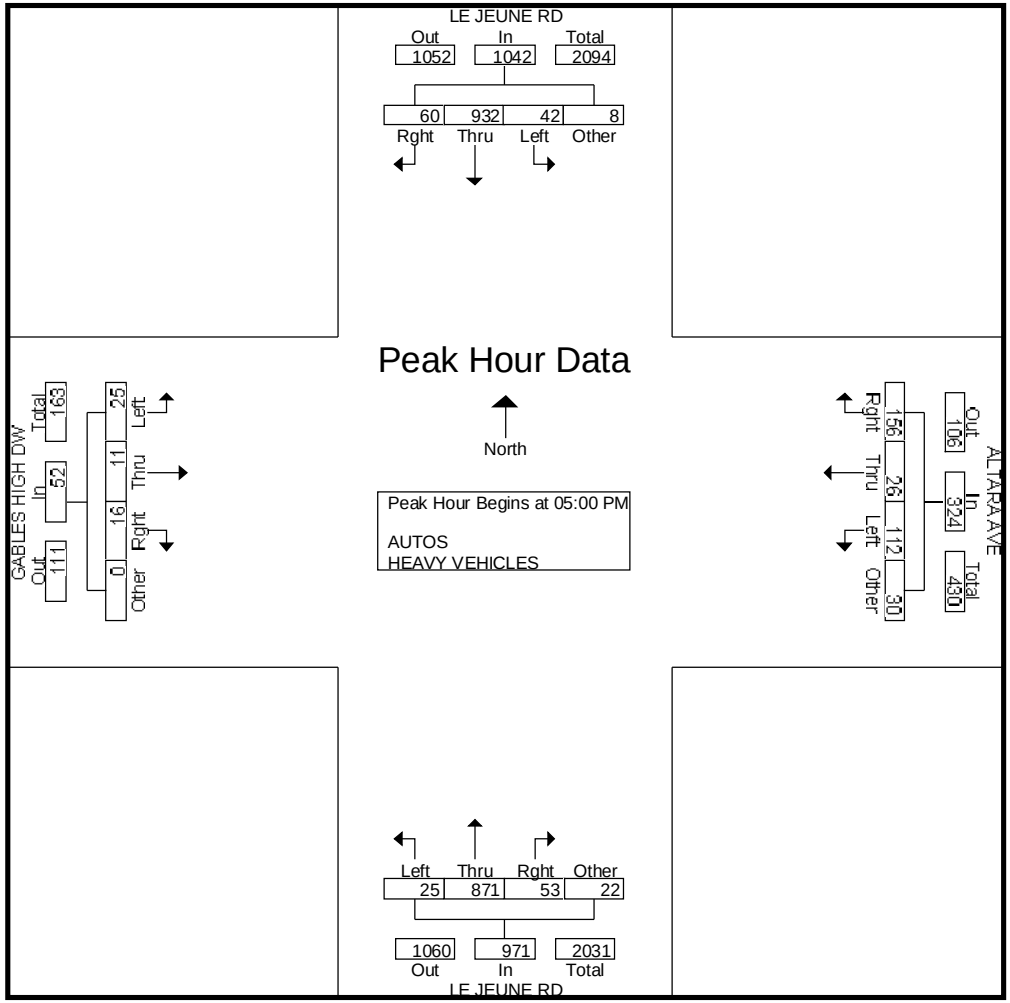

Crosroads Engineering Data, Inc.

13284 SW 120th Street
Miami, Florida, 33186
Tel: 305-233-3997 Fax: 305-233-7720

CLIENT : TRAFTECH
JOB NO : 2011-054
PROJECT: CORAL GABLES COUNTS
COUNTY : MIAMI-DADE

File Name : ALTARA @ LAGUNA
Site Code : 00000000
Start Date : 9/15/2011
Page No : 1

Groups Printed- HEAVY VEHICLES

	LAGUNA ST From North				ALTARA AVE From East				LAGUNA ST From South				ALTARA AVE From West				
Start Time	Rght	Thru	Left	Other	Rght	Thru	Left	Other	Rght	Thru	Left	Other	Rght	Thru	Left	Other	Int. Total
06:30 AM	0	0	1	0	0	0	0	0	0	0	0	0	0	1	0	0	2
06:45 AM	0	0	0	0	0	0	0	0	0	0	0	0	0	0	1	0	1
Total	0	0	1	0	0	0	0	0	0	0	0	0	0	1	1	0	3
07:00 AM	0	0	0	0	0	0	0	0	0	1	0	0	0	0	0	0	1
07:15 AM	0	0	0	0	0	0	0	0	0	1	0	0	0	0	0	0	1
07:30 AM	0	0	0	0	0	0	0	0	0	0	1	0	0	0	0	0	1
*** BREAK ***																	
Total	0	0	0	0	0	0	0	0	0	2	1	0	0	0	0	0	3
*** BREAK ***																	
08:15 AM	0	0	1	0	0	1	0	0	0	0	0	0	0	1	0	0	3
08:30 AM	0	0	0	0	0	2	1	0	0	0	0	0	0	0	1	0	4
08:45 AM	1	0	0	0	0	0	1	0	0	0	0	0	0	0	0	0	2
Total	1	0	1	0	0	3	2	0	0	0	0	0	0	1	1	0	9
09:00 AM	1	0	0	0	0	1	0	0	0	0	0	0	0	1	0	0	3
09:15 AM	0	0	0	0	0	0	0	0	0	0	1	0	0	0	0	0	1
*** BREAK ***																	
Total	1	0	0	0	0	1	0	0	0	0	1	0	0	1	0	0	4
*** BREAK ***																	
02:30 PM	0	0	0	0	0	0	0	0	0	1	0	0	0	0	1	0	2
02:45 PM	0	0	0	0	0	0	0	0	1	0	0	0	0	1	0	0	2
Total	0	0	0	0	0	0	0	0	1	1	0	0	0	1	1	0	4
03:00 PM	0	0	0	0	0	2	0	0	0	0	0	0	0	1	0	0	3
03:15 PM	0	0	0	0	1	0	0	0	0	0	0	0	0	0	0	0	1
03:30 PM	0	1	0	0	0	0	0	0	0	0	1	0	0	0	1	0	3
03:45 PM	0	0	0	0	2	1	0	0	0	1	0	0	0	1	0	0	5
Total	0	1	0	0	3	3	0	0	0	1	1	0	0	2	1	0	12
04:00 PM	0	0	0	0	0	2	0	0	0	0	0	0	0	0	0	0	2
*** BREAK ***																	
04:30 PM	0	0	0	0	0	1	0	0	0	0	0	0	0	1	0	0	2
04:45 PM	0	0	0	0	0	1	0	0	0	0	0	0	0	2	0	0	3
Total	0	0	0	0	0	4	0	0	0	0	0	0	0	3	0	0	7

Crosroads Engineering Data, Inc.

13284 SW 120th Street
Miami, Florida, 33186
Tel: 305-233-3997 Fax: 305-233-7720

CLIENT : TRAFTECH
JOB NO : 2011-054
PROJECT: CORAL GABLES COUNTS
COUNTY : MIAMI-DADE

File Name : ALTARA @ LAGUNA
Site Code : 00000000
Start Date : 9/15/2011
Page No : 2

Groups Printed- HEAVY VEHICLES

	LAGUNA ST From North				ALTARA AVE From East				LAGUNA ST From South				ALTARA AVE From West				
Start Time	Rght	Thru	Left	Other	Rght	Thru	Left	Other	Rght	Thru	Left	Other	Rght	Thru	Left	Other	Int. Total
*** BREAK ***																	
05:15 PM	0	0	0	0	1	0	0	0	0	1	0	0	0	0	0	0	2
05:30 PM	0	0	0	0	0	2	0	0	0	0	0	0	0	1	0	0	3
*** BREAK ***																	
Total	0	0	0	0	1	2	0	0	0	1	0	0	0	1	0	0	5
Grand Total	2	1	2	0	4	13	2	0	1	5	3	0	0	10	4	0	47
Apprch %	40	20	40	0	21.1	68.4	10.5	0	11.1	55.6	33.3	0	0	71.4	28.6	0	
Total %	4.3	2.1	4.3	0	8.5	27.7	4.3	0	2.1	10.6	6.4	0	0	21.3	8.5	0	

Crosroads Engineering Data, Inc.

13284 SW 120th Street
Miami, Florida, 33186
Tel: 305-233-3997 Fax: 305-233-7720

CLIENT : TRAFTECH
JOB NO : 2011-054
PROJECT: CORAL GABLES COUNTS
COUNTY : MIAMI-DADE

File Name : ALTARA @ LAGUNA
Site Code : 00000000
Start Date : 9/15/2011
Page No : 1

Groups Printed- AUTOS - HEAVY VEHICLES

	LAGUNA ST From North				ALTARA AVE From East				LAGUNA ST From South				ALTARA AVE From West				
Start Time	Rght	Thru	Left	Other	Rght	Thru	Left	Other	Rght	Thru	Left	Other	Rght	Thru	Left	Other	Int. Total
06:30 AM	4	3	1	9	2	13	0	5	1	1	1	0	1	9	2	1	53
06:45 AM	4	0	0	46	12	42	4	6	4	0	2	0	3	34	9	1	167
Total	8	3	1	55	14	55	4	11	5	1	3	0	4	43	11	2	220
07:00 AM	3	2	1	100	47	45	5	12	9	4	1	2	8	68	8	1	316
07:15 AM	0	2	1	35	10	24	7	2	2	2	0	1	3	32	5	3	129
07:30 AM	2	1	1	1	3	14	2	1	3	0	4	0	1	9	3	0	45
07:45 AM	3	0	0	2	4	10	5	2	0	1	10	0	0	17	5	1	60
Total	8	5	3	138	64	93	19	17	14	7	15	3	12	126	21	5	550
08:00 AM	0	4	0	2	0	8	2	5	3	1	5	0	3	15	1	0	49
08:15 AM	4	0	2	0	0	16	0	2	4	2	3	0	0	20	1	0	54
08:30 AM	0	3	0	2	4	7	1	5	1	2	0	0	2	24	8	1	60
08:45 AM	3	2	1	0	4	14	2	4	7	1	6	0	3	31	3	1	82
Total	7	9	3	4	8	45	5	16	15	6	14	0	8	90	13	2	245
09:00 AM	3	2	1	5	5	26	6	13	3	4	16	0	5	31	5	0	125
09:15 AM	4	2	1	0	5	26	5	7	5	0	5	1	2	19	2	0	84
*** BREAK ***																	
Total	7	4	2	5	10	52	11	20	8	4	21	1	7	50	7	0	209
*** BREAK ***																	
02:30 PM	7	0	11	7	13	25	3	11	17	9	5	36	2	28	16	16	206
02:45 PM	6	2	2	5	6	28	3	9	8	5	8	23	13	20	5	21	164
Total	13	2	13	12	19	53	6	20	25	14	13	59	15	48	21	37	370
03:00 PM	5	4	0	7	4	24	1	5	1	2	11	5	3	20	3	7	102
03:15 PM	10	3	1	2	4	27	2	5	3	0	6	5	2	14	4	0	88
03:30 PM	4	3	0	4	5	33	1	2	4	2	4	2	6	12	3	4	89
03:45 PM	4	4	0	1	7	24	7	3	4	7	6	0	4	20	4	1	96
Total	23	14	1	14	20	108	11	15	12	11	27	12	15	66	14	12	375
04:00 PM	5	6	1	2	0	40	5	3	7	1	7	0	5	17	5	10	114
04:15 PM	2	2	0	6	2	29	4	2	5	2	7	17	9	19	2	2	110
04:30 PM	5	7	1	0	6	57	7	1	5	6	4	2	2	15	3	0	121
04:45 PM	2	3	1	2	7	34	4	2	5	4	8	4	11	20	2	4	113
Total	14	18	3	10	15	160	20	8	22	13	26	23	27	71	12	16	458

Crosroads Engineering Data, Inc.
13284 SW 120th Street
Miami, Florida, 33186
Tel: 305-233-3997 Fax: 305-233-7720

CLIENT : TRAFTECH
JOB NO : 2011-054
PROJECT: CORAL GABLES COUNTS
COUNTY : MIAMI-DADE

File Name : ALTARA @ LAGUNA
Site Code : 00000000
Start Date : 9/15/2011
Page No : 2

Groups Printed- AUTOS - HEAVY VEHICLES

	LAGUNA ST From North				ALTARA AVE From East				LAGUNA ST From South				ALTARA AVE From West				
Start Time	Rght	Thru	Left	Other	Rght	Thru	Left	Other	Rght	Thru	Left	Other	Rght	Thru	Left	Other	Int. Total
05:00 PM	12	4	0	1	6	51	4	4	11	3	9	0	5	11	8	2	131
05:15 PM	8	1	1	0	3	59	5	4	6	3	2	1	7	20	4	0	124
05:30 PM	12	3	0	3	6	48	2	2	4	2	6	1	2	15	3	2	111
05:45 PM	6	6	0	2	5	48	6	5	3	3	9	0	2	19	2	0	116
Total	38	14	1	6	20	206	17	15	24	11	26	2	16	65	17	4	482
Grand Total	118	69	27	244	170	772	93	122	125	67	145	100	104	559	116	78	2909
Apprch %	25.8	15.1	5.9	53.3	14.7	66.7	8	10.5	28.6	15.3	33.2	22.9	12.1	65.2	13.5	9.1	
Total %	4.1	2.4	0.9	8.4	5.8	26.5	3.2	4.2	4.3	2.3	5	3.4	3.6	19.2	4	2.7	
AUTOS	116	68	25	244	166	759	91	122	124	62	142	100	104	549	112	78	2862
% AUTOS	98.3	98.6	92.6	100	97.6	98.3	97.8	100	99.2	92.5	97.9	100	100	98.2	96.6	100	98.4
HEAVY VEHICLES	2	1	2	0	4	13	2	0	1	5	3	0	0	10	4	0	47
% HEAVY VEHICLES	1.7	1.4	7.4	0	2.4	1.7	2.2	0	0.8	7.5	2.1	0	0	1.8	3.4	0	1.6

Crosroads Engineering Data, Inc.

13284 SW 120th Street
Miami, Florida, 33186
Tel: 305-233-3997 Fax: 305-233-7720

CLIENT : TRAFTECH
JOB NO : 2011-054
PROJECT: CORAL GABLES COUNTS
COUNTY : MIAMI-DADE

File Name : ALTARA @ LAGUNA
Site Code : 00000000
Start Date : 9/15/2011
Page No : 3

	LAGUNA ST From North					ALTARA AVE From East					LAGUNA ST From South					ALTARA AVE From West					
Start Time	Rght	Thru	Left	Other	App. Total	Rght	Thru	Left	Other	App. Total	Rght	Thru	Left	Other	App. Total	Rght	Thru	Left	Other	App. Total	Int. Total
Peak Hour Analysis From 06:30 AM to 09:15 AM - Peak 1 of 1																					
Peak Hour for Entire Intersection Begins at 06:30 AM																					
06:30 AM	4	3	1	9	17	2	13	0	5	20	1	1	1	0	3	1	9	2	1	13	53
06:45 AM	4	0	0	46	50	12	42	4	6	64	4	0	2	0	6	3	34	9	1	47	167
07:00 AM	3	2	1	100	106	47	45	5	12	109	9	4	1	2	16	8	68	8	1	85	316
07:15 AM	0	2	1	35	38	10	24	7	2	43	2	2	0	1	5	3	32	5	3	43	129
Total Volume	11	7	3	190	211	71	124	16	25	236	16	7	4	3	30	15	143	24	6	188	665
% App. Total	5.2	3.3	1.4	90		30.1	52.5	6.8	10.6		53.3	23.3	13.3	10		8	76.1	12.8	3.2		
PHF	.688	.583	.750	.475	.498	.378	.689	.571	.521	.541	.444	.438	.500	.375	.469	.469	.526	.667	.500	.553	.526

Crosroads Engineering Data, Inc.
13284 SW 120th Street
Miami, Florida, 33186
Tel: 305-233-3997 Fax: 305-233-7720

CLIENT : TRAFTECH
JOB NO : 2011-054
PROJECT: CORAL GABLES COUNTS
COUNTY : MIAMI-DADE

File Name : ALTARA @ LAGUNA
Site Code : 00000000
Start Date : 9/15/2011
Page No : 4

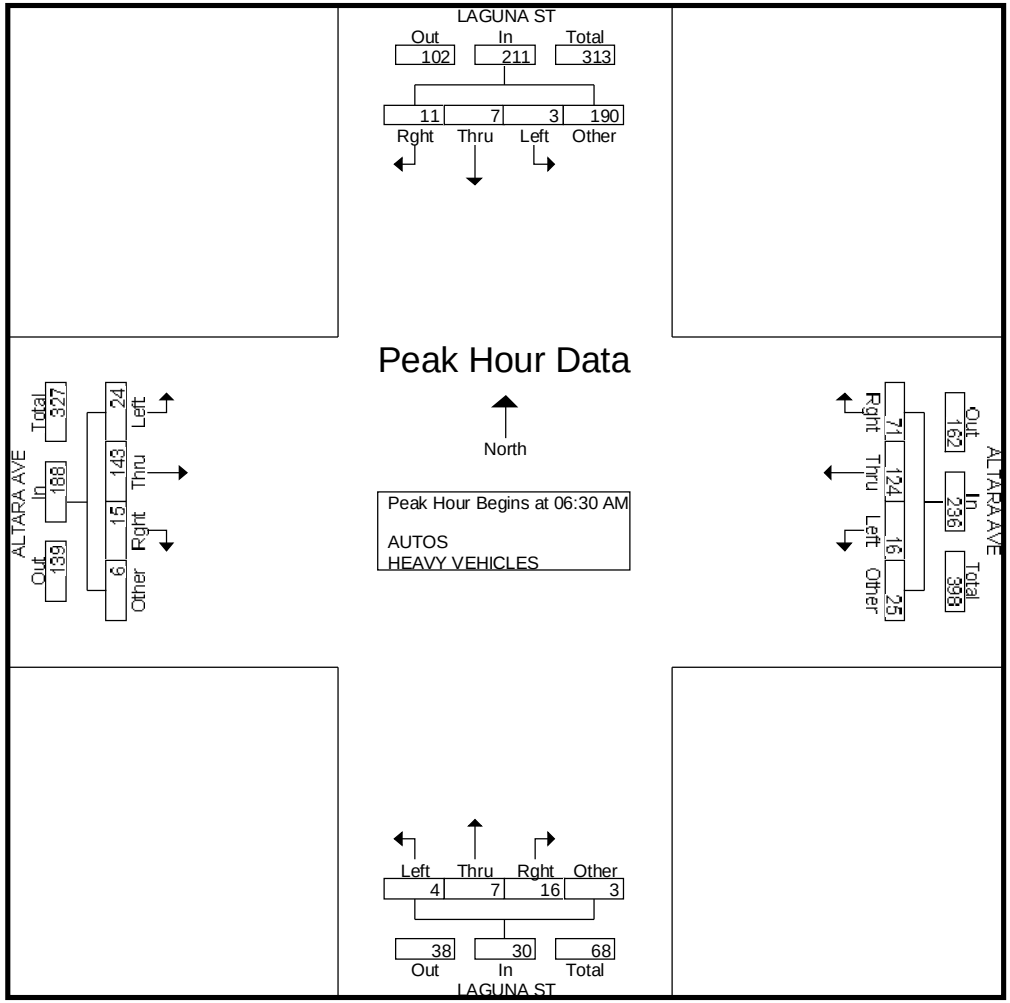

Crosroads Engineering Data, Inc.

13284 SW 120th Street
Miami, Florida, 33186
Tel: 305-233-3997 Fax: 305-233-7720

CLIENT : TRAFTECH
JOB NO : 2011-054
PROJECT: CORAL GABLES COUNTS
COUNTY : MIAMI-DADE

File Name : ALTARA @ LAGUNA
Site Code : 00000000
Start Date : 9/15/2011
Page No : 5

	LAGUNA ST From North					ALTARA AVE From East					LAGUNA ST From South					ALTARA AVE From West					
Start Time	Rght	Thru	Left	Other	App. Total	Rght	Thru	Left	Other	App. Total	Rght	Thru	Left	Other	App. Total	Rght	Thru	Left	Other	App. Total	Int. Total
Peak Hour Analysis From 02:30 PM to 05:45 PM - Peak 1 of 1																					
Peak Hour for Entire Intersection Begins at 02:30 PM																					
02:30 PM	7	0	11	7	25	13	25	3	11	52	17	9	5	36	67	2	28	16	16	62	206
02:45 PM	6	2	2	5	15	6	28	3	9	46	8	5	8	23	44	13	20	5	21	59	164
03:00 PM	5	4	0	7	16	4	24	1	5	34	1	2	11	5	19	3	20	3	7	33	102
03:15 PM	10	3	1	2	16	4	27	2	5	38	3	0	6	5	14	2	14	4	0	20	88
Total Volume	28	9	14	21	72	27	104	9	30	170	29	16	30	69	144	20	82	28	44	174	560
% App. Total	38.9	12.5	19.4	29.2		15.9	61.2	5.3	17.6		20.1	11.1	20.8	47.9		11.5	47.1	16.1	25.3		
PHF	.700	.563	.318	.750	.720	.519	.929	.750	.682	.817	.426	.444	.682	.479	.537	.385	.732	.438	.524	.702	.680

Crosroads Engineering Data, Inc.
13284 SW 120th Street
Miami, Florida, 33186
Tel: 305-233-3997 Fax: 305-233-7720

CLIENT : TRAFTECH
JOB NO : 2011-054
PROJECT: CORAL GABLES COUNTS
COUNTY : MIAMI-DADE

File Name : ALTARA @ LAGUNA
Site Code : 00000000
Start Date : 9/15/2011
Page No : 6

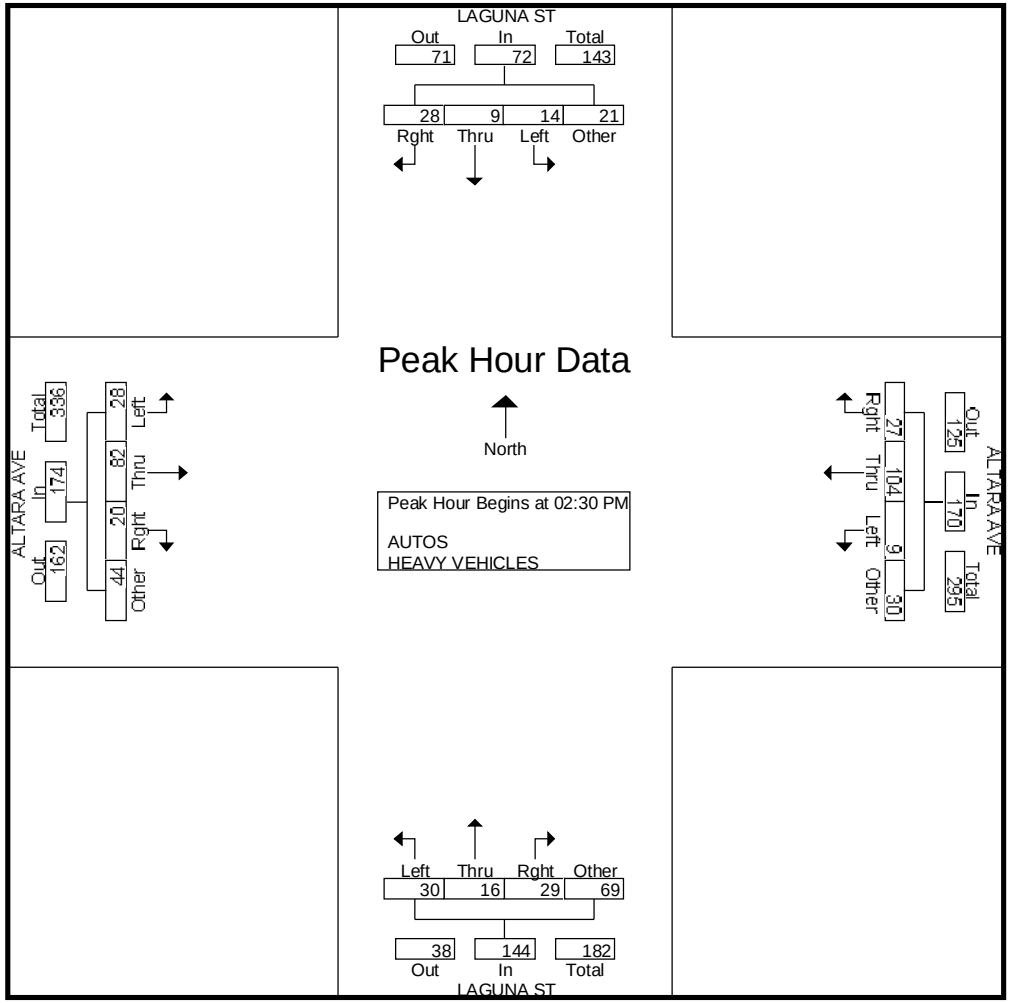

Crosroads Engineering Data, Inc.

13284 SW 120th Street
Miami, Florida, 33186
Tel: 305-233-3997 Fax: 305-233-7720

CLIENT : TRAFTECH
JOB NO : 2011-054
PROJECT: CORAL GABLES COUNTS
COUNTY : MIAMI-DADE

File Name : ALTARA @ LAGUNA
Site Code : 00000000
Start Date : 9/15/2011
Page No : 1

Groups Printed- HEAVY VEHICLES

	LAGUNA ST From North				ALTARA AVE From East				LAGUNA ST From South				ALTARA AVE From West				
Start Time	Rght	Thru	Left	Other	Rght	Thru	Left	Other	Rght	Thru	Left	Other	Rght	Thru	Left	Other	Int. Total
06:30 AM	0	0	1	0	0	0	0	0	0	0	0	0	0	1	0	0	2
06:45 AM	0	0	0	0	0	0	0	0	0	0	0	0	0	0	1	0	1
Total	0	0	1	0	0	0	0	0	0	0	0	0	0	1	1	0	3
07:00 AM	0	0	0	0	0	0	0	0	0	1	0	0	0	0	0	0	1
07:15 AM	0	0	0	0	0	0	0	0	0	1	0	0	0	0	0	0	1
07:30 AM	0	0	0	0	0	0	0	0	0	0	1	0	0	0	0	0	1
*** BREAK ***																	
Total	0	0	0	0	0	0	0	0	0	2	1	0	0	0	0	0	3
*** BREAK ***																	
08:15 AM	0	0	1	0	0	1	0	0	0	0	0	0	0	1	0	0	3
08:30 AM	0	0	0	0	0	2	1	0	0	0	0	0	0	0	1	0	4
08:45 AM	1	0	0	0	0	0	1	0	0	0	0	0	0	0	0	0	2
Total	1	0	1	0	0	3	2	0	0	0	0	0	0	1	1	0	9
09:00 AM	1	0	0	0	0	1	0	0	0	0	0	0	0	1	0	0	3
09:15 AM	0	0	0	0	0	0	0	0	0	0	1	0	0	0	0	0	1
*** BREAK ***																	
Total	1	0	0	0	0	1	0	0	0	0	1	0	0	1	0	0	4
*** BREAK ***																	
02:30 PM	0	0	0	0	0	0	0	0	0	1	0	0	0	0	1	0	2
02:45 PM	0	0	0	0	0	0	0	0	1	0	0	0	0	1	0	0	2
Total	0	0	0	0	0	0	0	0	1	1	0	0	0	1	1	0	4
03:00 PM	0	0	0	0	0	2	0	0	0	0	0	0	0	1	0	0	3
03:15 PM	0	0	0	0	1	0	0	0	0	0	0	0	0	0	0	0	1
03:30 PM	0	1	0	0	0	0	0	0	0	0	1	0	0	0	1	0	3
03:45 PM	0	0	0	0	2	1	0	0	0	1	0	0	0	1	0	0	5
Total	0	1	0	0	3	3	0	0	0	1	1	0	0	2	1	0	12
04:00 PM	0	0	0	0	0	2	0	0	0	0	0	0	0	0	0	0	2
*** BREAK ***																	
04:30 PM	0	0	0	0	0	1	0	0	0	0	0	0	0	1	0	0	2
04:45 PM	0	0	0	0	0	1	0	0	0	0	0	0	0	2	0	0	3
Total	0	0	0	0	0	4	0	0	0	0	0	0	0	3	0	0	7

Crosroads Engineering Data, Inc.

13284 SW 120th Street
Miami, Florida, 33186
Tel: 305-233-3997 Fax: 305-233-7720

CLIENT : TRAFTECH
JOB NO : 2011-054
PROJECT: CORAL GABLES COUNTS
COUNTY : MIAMI-DADE

File Name : ALTARA @ LAGUNA
Site Code : 00000000
Start Date : 9/15/2011
Page No : 2

Groups Printed- HEAVY VEHICLES

	LAGUNA ST From North				ALTARA AVE From East				LAGUNA ST From South				ALTARA AVE From West				
Start Time	Rght	Thru	Left	Other	Rght	Thru	Left	Other	Rght	Thru	Left	Other	Rght	Thru	Left	Other	Int. Total
*** BREAK ***																	
05:15 PM	0	0	0	0	1	0	0	0	0	1	0	0	0	0	0	0	2
05:30 PM	0	0	0	0	0	2	0	0	0	0	0	0	0	1	0	0	3
*** BREAK ***																	
Total	0	0	0	0	1	2	0	0	0	1	0	0	0	1	0	0	5
Grand Total	2	1	2	0	4	13	2	0	1	5	3	0	0	10	4	0	47
Apprch %	40	20	40	0	21.1	68.4	10.5	0	11.1	55.6	33.3	0	0	71.4	28.6	0	
Total %	4.3	2.1	4.3	0	8.5	27.7	4.3	0	2.1	10.6	6.4	0	0	21.3	8.5	0	

APPENDIX C

Cardinal Distribution Data (TAZ 1081)

Miami-Dade 2035 Long Range Transportation Plan

Directional Trip Distribution Report

October 29, 2009

Prepared by:

Gannett Fleming

In association with:

Advanced Transportation Engineering Consultants

AECOM Consult

Charesse Chester and Associates

Citilabs

Metropolitan Center at Florida International University

Strategy Solutions

MIAMI-DADE 2035 DIRECTIONAL DISTRIBUTION SUMMARY

			CARDINAL DIRECTIONS								
ORIGIN ZONE			NNE	ENE	ESE	SSE	SSW	WSW	WNW	NNW	TOTAL
		PERCENT	17.2	12.09	0.64	1.72	13.22	21.61	14.39	19.12	
1055	3755	TRIPS	2210	1830	81	253	936	1424	1051	1445	9,230
		PERCENT	23.94	19.83	0.88	2.74	10.14	15.43	11.39	15.66	
1056	3756	TRIPS	1622	1625	203	475	593	1057	870	1114	7,559
		PERCENT	21.46	21.5	2.69	6.28	7.84	13.98	11.51	14.74	
1057	3757	TRIPS	1648	1761	257	575	1266	994	1083	1594	9,178
		PERCENT	17.96	19.19	2.8	6.26	13.79	10.83	11.8	17.37	
1058	3758	TRIPS	2337	2185	755	1163	2296	2156	1049	2603	14,544
		PERCENT	16.07	15.02	5.19	8	15.79	14.82	7.21	17.9	
1059	3759	TRIPS	2686	2755	994	818	2677	2716	1588	2476	16,710
		PERCENT	16.07	16.49	5.95	4.9	16.02	16.25	9.5	14.82	
1060	3760	TRIPS	1356	1033	260	209	1204	1296	902	1324	7,584
		PERCENT	17.88	13.62	3.43	2.76	15.88	17.09	11.89	17.46	
1061	3761	TRIPS	4150	3917	908	1168	3818	2973	1915	2115	20,964
		PERCENT	19.8	18.68	4.33	5.57	18.21	14.18	9.13	10.09	
1062	3762	TRIPS	1541	2387	563	612	1321	1133	953	927	9,437
		PERCENT	16.33	25.29	5.97	6.49	14	12.01	10.1	9.82	
1063	3763	TRIPS	662	1376	752	422	305	242	241	460	4,460
		PERCENT	14.84	30.85	16.86	9.46	6.84	5.43	5.4	10.31	
1064	3764	TRIPS	1605	844	274	231	847	816	1029	1142	6,788
		PERCENT	23.64	12.43	4.04	3.4	12.48	12.02	15.16	16.82	
1065	3765	TRIPS	635	410	207	151	617	384	468	817	3,689
		PERCENT	17.21	11.11	5.61	4.09	16.73	10.41	12.69	22.15	
1066	3766	TRIPS	673	548	250	141	730	789	542	1200	4,873
		PERCENT	13.81	11.25	5.13	2.89	14.98	16.19	11.12	24.63	
1067	3767	TRIPS	332	316	136	86	354	487	413	669	2,793
		PERCENT	11.89	11.31	4.87	3.08	12.67	17.44	14.79	23.95	
1068	3768	TRIPS	939	754	113	359	927	1323	1340	1157	6,912
		PERCENT	13.59	10.91	1.63	5.19	13.41	19.14	19.39	16.74	
1069	3769	TRIPS	902	415	187	0	325	580	453	1015	3,877
		PERCENT	23.27	10.7	4.82	0	8.38	14.96	11.68	26.18	
1070	3770	TRIPS	7275	1615	205	0	2303	7044	4924	7089	30,455
		PERCENT	23.89	5.3	0.67	0	7.56	23.13	16.17	23.28	
1071	3771	TRIPS	5307	2706	160	0	1718	3361	2294	4701	20,247
		PERCENT	26.21	13.36	0.79	0	8.49	16.6	11.33	23.22	
1072	3772	TRIPS	1779	128	12	14	268	358	286	676	3,521
		PERCENT	50.53	3.64	0.34	0.4	7.61	10.17	8.12	19.2	
1073	3773	TRIPS	520	31	4	0	55	128	156	585	1,479
		PERCENT	35.16	2.1	0.27	0	3.72	8.65	10.55	39.55	
1074	3774	TRIPS	850	574	14	38	381	475	242	795	3,369
		PERCENT	25.23	17.04	0.42	1.13	11.31	14.1	7.18	23.6	
1075	3775	TRIPS	767	463	14	0	292	664	331	1203	3,734
		PERCENT	20.54	12.4	0.37	0	7.82	17.78	8.86	32.22	
1076	3776	TRIPS	629	251	57	0	252	328	182	605	2,304
		PERCENT	27.3	10.89	2.47	0	10.94	14.24	7.9	26.26	
1077	3777	TRIPS	800	500	278	199	648	950	602	960	4,937
		PERCENT	16.2	10.13	5.63	4.03	13.13	19.24	12.19	19.45	
1078	3778	TRIPS	930	1020	49	44	301	542	362	1160	4,408
		PERCENT	21.1	23.14	1.11	1	6.83	12.3	8.21	26.32	
1079	3779	TRIPS	1150	935	732	469	1246	1410	536	1406	7,884
		PERCENT	14.59	11.86	9.28	5.95	15.8	17.88	6.8	17.83	
1080	3780	TRIPS	897	597	251	105	739	885	402	780	4,656
		PERCENT	19.27	12.82	5.39	2.26	15.87	19.01	8.63	16.75	
1081	3781	TRIPS	4328	2415	821	760	3038	2502	1290	1933	17,087
		PERCENT	25.33	14.13	4.8	4.45	17.78	14.64	7.55	11.31	
1082	3782	TRIPS	2186	883	33	152	496	698	421	1519	6,388
		PERCENT	34.22	13.82	0.52	2.38	7.76	10.93	6.59	23.78	
1083	3783	TRIPS	1276	466	35	37	304	639	534	818	4,109
		PERCENT	31.05	11.34	0.85	0.9	7.4	15.55	13	19.91	
1084	3784	TRIPS	213	60	2	20	13	30	29	67	434
		PERCENT	49.08	13.82	0.46	4.61	3	6.91	6.68	15.44	
1085	3785	TRIPS	305	207	46	28	31	79	24	84	804
		PERCENT	37.94	25.75	5.72	3.48	3.86	9.83	2.99	10.45	
1086	3786	TRIPS	2787	1004	54	445	2360	4765	1999	1683	15,097
		PERCENT	18.46	6.65	0.36	2.95	15.63	31.56	13.24	11.15	
1087	3787	TRIPS	653	281	32	179	224	284	206	228	2,087
		PERCENT	31.29	13.46	1.53	8.58	10.73	13.61	9.87	10.92	
1088	3788	TRIPS	1774	957	199	608	1053	1196	482	703	6,972

APPENDIX D

Historical Traffic Counts and Peak Season Conversion Factors

Florida Department of Transportation
Transportation Statistics Office
2010 Historical AADT Report

County: 87 - MIAMI-DADE

Site: 0082 - SR 976/BIRD RD, 200' E SW 42 AV

Year	AADT	Direction 1	Direction 2	K Factor	D Factor	T Factor
2010	37000 C	E 18500	W 18500	7.87	58.27	3.00
2009	34500 C	E 17500	W 17000	7.98	59.96	3.70
2008	35000 C	E 17500	W 17500	8.07	66.31	5.10
2007	39000 C	E 20000	W 19000	7.90	63.12	5.50
2006	38000 C	E 18000	W 20000	7.39	58.66	6.70
2005	39000 C	E 20000	W 19000	7.70	65.70	5.50
2004	42500 C	E 21000	W 21500	8.20	67.10	7.10
2003	42000 C	E 23000	W 19000	8.10	72.30	6.10
2002	44500 C	E 21500	W 23000	9.20	68.00	4.40
2001	45500 C	E 23500	W 22000	8.20	53.50	5.80
2000	44000 C	E 22000	W 22000	8.20	53.10	3.70
1999	44000 C	E 22500	W 21500	9.10	52.70	5.60
1998	41000 C	E 21000	W 20000	9.30	52.70	3.00
1997	37000 C	E 19000	W 18000	9.10	64.50	7.60
1996	39000 C	E 20000	W 19000	8.50	53.10	5.90
1995	37000 C	E 19000	W 18000	7.90	62.60	10.30

AADT Flags: C = Computed; E = Manual Estimate; F = First Year Estimate
S = Second Year Estimate; T = Third Year Estimate; X = Unknown

Florida Department of Transportation
Transportation Statistics Office
2010 Historical AADT Report

County: 87 - MIAMI-DADE

Site: 1048 - SR 976/BIRD RD, 200' W SW 42 AV

Year	AADT	Direction 1	Direction 2	K Factor	D Factor	T Factor
2010	40500 C	E 19500	W 21000	7.87	58.27	3.00
2009	40500 C	E 20000	W 20500	7.98	59.96	3.70
2008	38000 C	E 19500	W 18500	8.07	66.31	5.10
2007	40500 C	E 21000	W 19500	7.90	63.12	5.50
2006	41500 C	E 21000	W 20500	7.39	58.66	6.70
2005	51000 F	E 24500	W 26500	7.70	65.70	5.50
2004	43500 C	E 21000	W 22500	8.20	67.10	7.10
2003	40000 C	E 20000	W 20000	8.10	72.30	6.10
2002	45000 C	E 23500	W 21500	9.20	68.00	4.40
2001	47500 C	E 22500	W 25000	8.20	53.50	5.80
2000	44500 C	E 22500	W 22000	8.20	53.10	3.70
1999	47500 C	E 23500	W 24000	9.10	52.70	5.60
1998	43500 C	E 22500	W 21000	9.30	52.70	3.00
1997	37000 C	E 19000	W 18000	9.10	64.50	7.60
1996	39500 C	E 20000	W 19500	8.50	53.10	5.90
1995	36500 C	E 18500	W 18000	7.90	62.60	10.30

AADT Flags: C = Computed; E = Manual Estimate; F = First Year Estimate
S = Second Year Estimate; T = Third Year Estimate; X = Unknown

Florida Department of Transportation
Transportation Statistics Office
2010 Historical AADT Report

County: 87 - MIAMI-DADE

Site: 1053 - SR 953/LEJEUNE RD, 200' N PONCE DE LEON BLVD

Year	AADT	Direction 1	Direction 2	K Factor	D Factor	T Factor
2010	25500 C	N 12500	S 13000	7.87	58.27	2.40
2009	24500 C	N 12000	S 12500	7.98	59.96	2.60
2008	24000 C	N 11500	S 12500	8.07	66.31	6.90
2007	24500 C	N 12000	S 12500	7.90	63.12	6.90
2006	27000 C	N 13000	S 14000	7.39	58.66	14.80
2005	29000 C	N 14000	S 15000	7.70	65.70	3.10
2004	28000 C	N 13500	S 14500	8.20	67.10	3.10
2003	25500 C	N 12500	S 13000	8.10	72.30	4.60
2002	25500 C	N 13000	S 12500	9.20	68.00	4.40
2001	24000 C	N 11500	S 12500	8.20	53.50	7.30
2000	26000 C	N 13500	S 12500	8.20	53.10	3.00
1999	23500 C	N 12000	S 11500	9.10	52.70	3.50
1998	25000 C	N 12000	S 13000	9.30	52.70	6.10
1997	24500 C	N 12000	S 12500	9.10	64.50	4.20
1996	23500 C	N 11000	S 12500	8.50	53.10	7.30
1995	24000 C	N 10500	S 13500	7.90	62.60	5.40

AADT Flags: C = Computed; E = Manual Estimate; F = First Year Estimate
S = Second Year Estimate; T = Third Year Estimate; X = Unknown

2010 Peak Season Factor Category Report - Report Type: ALL
Category: 8701 MIAMI-DADE SOUTH

MOCF: 0.98

Week	Dates	SF	PSCF
1	01/01/2010 - 01/02/2010	1.00	1.02
2	01/03/2010 - 01/09/2010	1.03	1.05
3	01/10/2010 - 01/16/2010	1.05	1.07
4	01/17/2010 - 01/23/2010	1.05	1.07
5	01/24/2010 - 01/30/2010	1.04	1.06
6	01/31/2010 - 02/06/2010	1.03	1.05
7	02/07/2010 - 02/13/2010	1.02	1.04
8	02/14/2010 - 02/20/2010	1.02	1.04
9	02/21/2010 - 02/27/2010	1.01	1.03
10	02/28/2010 - 03/06/2010	1.01	1.03
11	03/07/2010 - 03/13/2010	1.01	1.03
12	03/14/2010 - 03/20/2010	1.00	1.02
13	03/21/2010 - 03/27/2010	1.00	1.02
14	03/28/2010 - 04/03/2010	1.00	1.02
15	04/04/2010 - 04/10/2010	1.00	1.02
16	04/11/2010 - 04/17/2010	1.00	1.02
17	04/18/2010 - 04/24/2010	1.00	1.02
18	04/25/2010 - 05/01/2010	1.00	1.02
19	05/02/2010 - 05/08/2010	1.00	1.02
20	05/09/2010 - 05/15/2010	1.01	1.03
21	05/16/2010 - 05/22/2010	1.01	1.03
22	05/23/2010 - 05/29/2010	1.01	1.03
23	05/30/2010 - 06/05/2010	1.01	1.03
24	06/06/2010 - 06/12/2010	1.02	1.04
25	06/13/2010 - 06/19/2010	1.02	1.04
26	06/20/2010 - 06/26/2010	1.02	1.04
27	06/27/2010 - 07/03/2010	1.02	1.04
28	07/04/2010 - 07/10/2010	1.02	1.04
29	07/11/2010 - 07/17/2010	1.02	1.04
30	07/18/2010 - 07/24/2010	1.01	1.03
31	07/25/2010 - 07/31/2010	1.00	1.02
32	08/01/2010 - 08/07/2010	0.99	1.01
33	08/08/2010 - 08/14/2010	0.99	1.01
34	08/15/2010 - 08/21/2010	0.98	1.00
35	08/22/2010 - 08/28/2010	0.98	1.00
*36	08/29/2010 - 09/04/2010	0.98	1.00
*37	09/05/2010 - 09/11/2010	0.99	1.01
*38	09/12/2010 - 09/18/2010	0.99	1.01
*39	09/19/2010 - 09/25/2010	0.98	1.00
*40	09/26/2010 - 10/02/2010	0.98	1.00
*41	10/03/2010 - 10/09/2010	0.97	0.99
*42	10/10/2010 - 10/16/2010	0.97	0.99
*43	10/17/2010 - 10/23/2010	0.97	0.99
*44	10/24/2010 - 10/30/2010	0.97	0.99
*45	10/31/2010 - 11/06/2010	0.97	0.99
*46	11/07/2010 - 11/13/2010	0.97	0.99
*47	11/14/2010 - 11/20/2010	0.98	1.00
*48	11/21/2010 - 11/27/2010	0.98	1.00
49	11/28/2010 - 12/04/2010	0.99	1.01
50	12/05/2010 - 12/11/2010	1.00	1.02
51	12/12/2010 - 12/18/2010	1.00	1.02
52	12/19/2010 - 12/25/2010	1.03	1.05
53	12/26/2010 - 12/31/2010	1.05	1.07

* Peak Season

APPENDIX E

Committed Development Traffic – Chase Bank

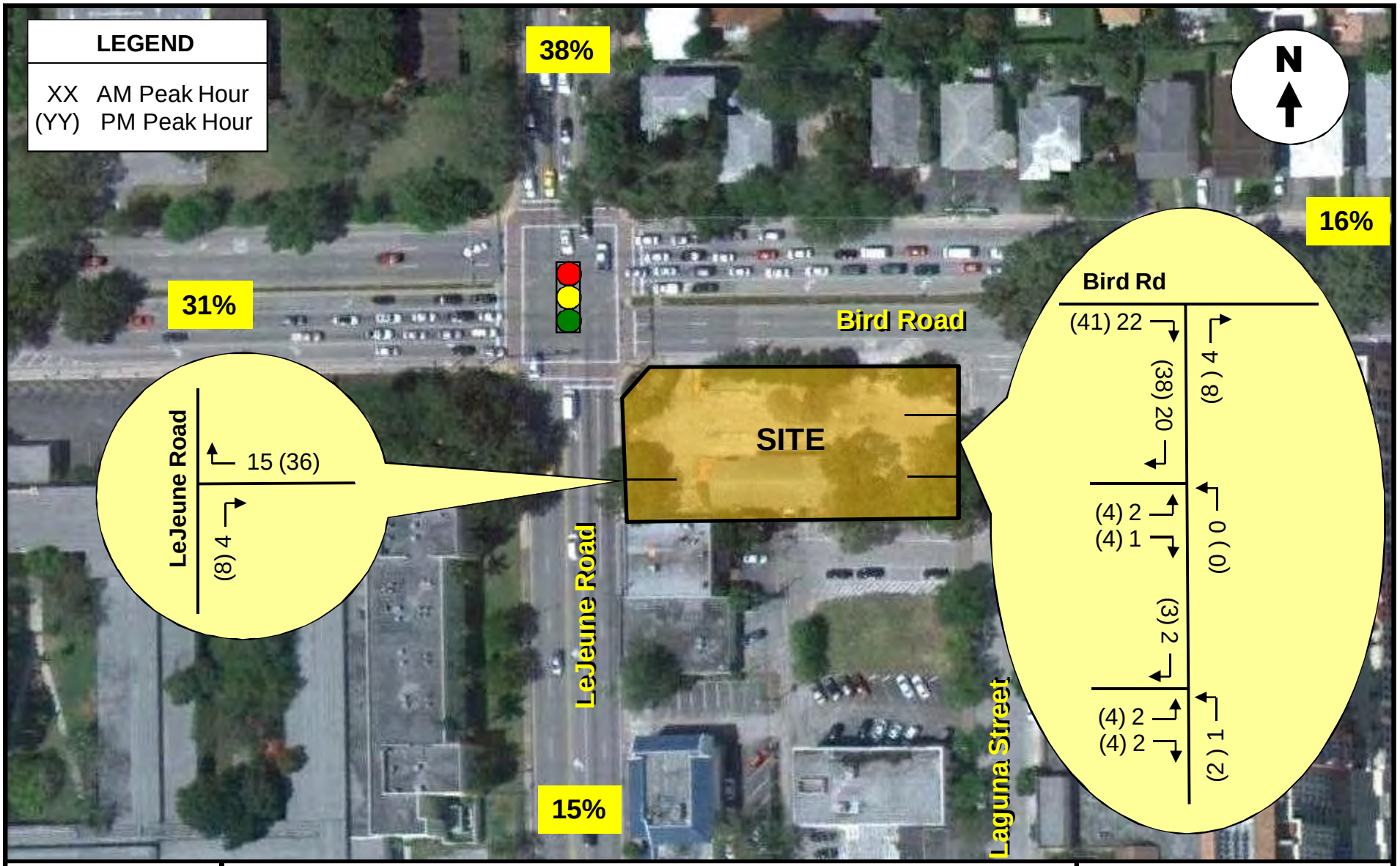

TrafTech
ENGINEERING, INC.

Driveway Traffic Assignment

FIGURE 2
Chase Bank
Miami-Dade County, Florida

APPENDIX F

Projected Turning Movement Volumes

FUTURE TURNING MOVEMENT VOLUME ANALYSIS

Le Jeune Road and Bird Road
AM Peak Hour

	Le Jeune Road Northbound			Le Jeune Road Southbound			Bird Road Eastbound			Bird Road Westbound		
Description	Left	Through	Right	Left	Through	Right	Left	Through	Right	Left	Through	Right
Existing Traffic (9/15/2011)	116	709	30	235	826	60	293	1,503	67	100	914	113
Season Adjustment Factor	1.01	1.01	1.01	1.01	1.01	1.01	1.01	1.01	1.01	1.01	1.01	1.01
2011 Peak Season Traffic	117	716	30	237	834	61	296	1,518	68	101	923	114
Annual Growth Rate	1.5%	1.5%	1.5%	1.5%	1.5%	1.5%	1.5%	1.5%	1.5%	1.5%	1.5%	1.5%
Chase Bank	5	10		10				8		4		
2013 Background Traffic	126	748	31	255	859	62	305	1,572	70	108	951	118
Project Trips	17	29			8			5				
2013 Total Traffic	**143**	**777**	**31**	**255**	**867**	**62**	**305**	**1,577**	**70**	**108**	**951**	**118**

Traf Tech
ENGINEERING, INC.

FUTURE TURNING MOVEMENT VOLUME ANALYSIS

Le Jeune Road and Bird Road
PM Peak Hour

Description	Le Jeune Road Northbound			Le Jeune Road Southbound			Bird Road Eastbound			Bird Road Westbound		
	Left	Through	Right	Left	Through	Right	Left	Through	Right	Left	Through	Right
Existing Traffic (9/15/2011)	147	761	63	157	820	156	160	1,091	79	104	1,450	156
Season Adjustment Factor	1.01	1.01	1.01	1.01	1.01	1.01	1.01	1.01	1.01	1.01	1.01	1.01
2011 Peak Season Traffic	148	769	64	159	828	158	162	1,102	80	105	1,465	158
Annual Growth Rate	1.5%	1.5%	1.5%	1.5%	1.5%	1.5%	1.5%	1.5%	1.5%	1.5%	1.5%	1.5%
Chase Bank	16	20		18				15		8		
2013 Background Traffic	169	812	66	181	853	162	166	1,150	82	116	1,509	162
Project Trips	13	21			39			24				
2013 Total Traffic	**182**	**833**	**66**	**181**	**892**	**162**	**166**	**1,174**	**82**	**116**	**1,509**	**162**

Traf Tech
ENGINEERING, INC.

FUTURE TURNING MOVEMENT VOLUME ANALYSIS

Bird Road and Salzedo Street
AM Peak Hour

	Salzedo Street Northbound			Southbound			Bird Road Eastbound			Bird Road Westbound		
Description	Left	Through	Right	Left	Through	Right	Left	Through	Right	Left	Through	Right
Existing Traffic (9/15/2011)	3		15					1,634	11		1,104	
Season Adjustment Factor	1.01	1.01	1.01	1.01	1.01	1.01	1.01	1.01	1.01	1.01	1.01	1.01
2011 Peak Season Traffic	3	0	15	0	0	0	0	1,650	11	0	1,115	0
Annual Growth Rate	1.5%	1.5%	1.5%	1.5%	1.5%	1.5%	1.5%	1.5%	1.5%	1.5%	1.5%	1.5%
Chase Bank								4			4	
2013 Background Traffic	3	0	16	0	0	0	0	1,704	11	0	1,153	0
Project Trips								16				
2013 Total Traffic	**3**	**0**	**16**	**0**	**0**	**0**	**0**	**1,720**	**11**	**0**	**1,153**	**0**

Traf Tech
ENGINEERING, INC.

FUTURE TURNING MOVEMENT VOLUME ANALYSIS

Bird Road and Salzedo Street
PM Peak Hour

	Salzedo Street Northbound			Southbound			Bird Road Eastbound			Bird Road Westbound		
Description	Left	Through	Right	Left	Through	Right	Left	Through	Right	Left	Through	Right
Existing Traffic (9/15/2011)	14		25					1,201	21		1,826	
Season Adjustment Factor	1.01	1.01	1.01	1.01	1.01	1.01	1.01	1.01	1.01	1.01	1.01	1.01
2011 Peak Season Traffic	14	0	25	0	0	0	0	1,213	21	0	1,844	0
Annual Growth Rate	1.5%	1.5%	1.5%	1.5%	1.5%	1.5%	1.5%	1.5%	1.5%	1.5%	1.5%	1.5%
Chase Bank								8			8	
2013 Background Traffic	15	0	26	0	0	0	0	1,258	22	0	1,908	0
Project Trips								12				
2013 Total Traffic	**15**	**0**	**26**	**0**	**0**	**0**	**0**	**1,270**	**22**	**0**	**1,908**	**0**

Traf Tech
ENGINEERING, INC.

FUTURE TURNING MOVEMENT VOLUME ANALYSIS

Le Jeune Road and Altara Avenue
AM Peak Hour

Description	Le Jeune Road Northbound			Le Jeune Road Southbound			Driveway Eastbound			Altara Avenue Westbound		
	Left	Through	Right	Left	Through	Right	Left	Through	Right	Left	Through	Right
Existing Traffic (9/15/2011)	46	604	88	69	597	41	4	1	0	51	14	82
Season Adjustment Factor	1.01	1.01	1.01	1.01	1.01	1.01	1.01	1.01	1.01	1.01	1.01	1.01
2011 Peak Season Traffic	46	610	89	70	603	41	4	1	0	52	14	83
Annual Growth Rate	1.5%	1.5%	1.5%	1.5%	1.5%	1.5%	1.5%	1.5%	1.5%	1.5%	1.5%	1.5%
Chase Bank		4			3							
2013 Background Traffic	48	632	92	72	624	43	4	1	0	53	15	85
Project Trips			5	8						17		46
2013 Total Traffic	**48**	**632**	**97**	**80**	**624**	**43**	**4**	**1**	**0**	**70**	**15**	**131**

Traf Tech
ENGINEERING, INC.

FUTURE TURNING MOVEMENT VOLUME ANALYSIS

Le Jeune Road and Altara Avenue
PM Peak Hour

	Le Jeune Road Northbound			Le Jeune Road Southbound			Driveway Eastbound			Altara Avenue Westbound		
Description	Left	Through	Right	Left	Through	Right	Left	Through	Right	Left	Through	Right
Existing Traffic (9/15/2011)	25	871	53	42	932	60	25	11	16	112	26	156
Season Adjustment Factor	1.01	1.01	1.01	1.01	1.01	1.01	1.01	1.01	1.01	1.01	1.01	1.01
2011 Peak Season Traffic	25	880	54	42	941	61	25	11	16	113	26	158
Annual Growth Rate	1.5%	1.5%	1.5%	1.5%	1.5%	1.5%	1.5%	1.5%	1.5%	1.5%	1.5%	1.5%
Chase Bank		8			8							
2013 Background Traffic	26	914	55	44	978	62	26	11	17	117	27	162
Project Trips			24	39						13		34
2013 Total Traffic	**26**	**914**	**79**	**83**	**978**	**62**	**26**	**11**	**17**	**130**	**27**	**196**

Traf Tech
ENGINEERING, INC.

FUTURE TURNING MOVEMENT VOLUME ANALYSIS

Laguna Street and Altara Avenue
AM Peak Hour

Description	Laguna Street Northbound			Laguna Street Southbound			Altara Avenue Eastbound			Altara Avenue Westbound		
	Left	Through	Right	Left	Through	Right	Left	Through	Right	Left	Through	Right
Existing Traffic (9/15/2011)	4	7	16	3	7	11	24	143	15	16	124	71
Season Adjustment Factor	1.01	1.01	1.01	1.01	1.01	1.01	1.01	1.01	1.01	1.01	1.01	1.01
2011 Peak Season Traffic	4	7	16	3	7	11	24	144	15	16	125	72
Annual Growth Rate	1.5%	1.5%	1.5%	1.5%	1.5%	1.5%	1.5%	1.5%	1.5%	1.5%	1.5%	1.5%
Chase Bank												
2013 Background Traffic	4	7	17	3	7	11	25	149	16	17	129	74
Project Trips						63	13					4
2013 Total Traffic	**4**	**7**	**17**	**3**	**7**	**74**	**38**	**149**	**16**	**17**	**129**	**78**

Traf Tech
ENGINEERING, INC.

FUTURE TURNING MOVEMENT VOLUME ANALYSIS

Laguna Street and Altara Avenue
PM Peak Hour

	Laguna Street Northbound			Laguna Street Southbound			Altara Avenue Eastbound			Altara Avenue Westbound		
Description	Left	Through	Right	Left	Through	Right	Left	Through	Right	Left	Through	Right
Existing Traffic (9/15/2011)	30	16	29	14	9	28	28	82	20	9	104	27
Season Adjustment Factor	1.01	1.01	1.01	1.01	1.01	1.01	1.01	1.01	1.01	1.01	1.01	1.01
2011 Peak Season Traffic	30	16	29	14	9	28	28	83	20	9	105	27
Annual Growth Rate	1.5%	1.5%	1.5%	1.5%	1.5%	1.5%	1.5%	1.5%	1.5%	1.5%	1.5%	1.5%
Chase Bank												
2013 Background Traffic	31	17	30	15	9	29	29	85	21	9	108	28
Project Trips						47	63					22
2013 Total Traffic	**31**	**17**	**30**	**15**	**9**	**76**	**92**	**85**	**21**	**9**	**108**	**50**

Traf Tech
ENGINEERING, INC.

FUTURE TURNING MOVEMENT VOLUME ANALYSIS

Laguna Street and Project Driveway
AM Peak Hour

Description	Laguna Street Northbound			Laguna Street Southbound			Driveway Eastbound			Westbound		
	Left	Through	Right	Left	Through	Right	Left	Through	Right	Left	Through	Right
Existing Traffic (9/15/2011)		102			21							
Season Adjustment Factor	1.01	1.01	1.01	1.01	1.01	1.01	1.01	1.01	1.01	1.01	1.01	1.01
2011 Peak Season Traffic	0	103	0	0	21	0	0	0	0	0	0	0
Annual Growth Rate	1.5%	1.5%	1.5%	1.5%	1.5%	1.5%	1.5%	1.5%	1.5%	1.5%	1.5%	1.5%
Chase Bank												
2013 Background Traffic	0	106	0	0	22	0	0	0	0	0	0	0
Project Trips	17					5	16		63			
2013 Total Traffic	**17**	**106**	**0**	**0**	**22**	**5**	**16**	**0**	**63**	**0**	**0**	**0**

Traf Tech
ENGINEERING, INC.

FUTURE TURNING MOVEMENT VOLUME ANALYSIS

Laguna Street and Project Driveway
PM Peak Hour

Description	Laguna Street Northbound			Laguna Street Southbound			Driveway Eastbound			Westbound		
	Left	Through	Right	Left	Through	Right	Left	Through	Right	Left	Through	Right
Existing Traffic (9/15/2011)		71			51							
Season Adjustment Factor	1.01	1.01	1.01	1.01	1.01	1.01	1.01	1.01	1.01	1.01	1.01	1.01
2011 Peak Season Traffic	0	72	0	0	52	0	0	0	0	0	0	0
Annual Growth Rate Chase Bank	1.5%	1.5%	1.5%	1.5%	1.5%	1.5%	1.5%	1.5%	1.5%	1.5%	1.5%	1.5%
2013 Background Traffic	0	74	0	0	53	0	0	0	0	0	0	0
Project Trips	85					24	12		47			
2013 Total Traffic	**85**	**74**	**0**	**0**	**53**	**24**	**12**	**0**	**47**	**0**	**0**	**0**

Traf Tech
ENGINEERING, INC.

APPENDIX G

Intersection Capacity Analyses

HCS+: Signalized Intersections Release 5.2

Analyst: Vargas
Agency: Traf Tech Engineering, Inc.
Date: 10/26/11
Period: AM Peak Hour
Project ID:
E/W St: Bird Road

Inter.: Bird/Le Jeune
Area Type: All other areas
Jurisd: Coral Gables
Year : 2011 Existing

N/S St: Le Jeune Road

SIGNALIZED INTERSECTION SUMMARY

	Eastbound			Westbound			Northbound			Southbound		
	L	T	R	L	T	R	L	T	R	L	T	R
No. Lanes	1	2	1	1	3	0	1	2	0	1	2	0
LGConfig	L	T	R	L	TR		L	TR		L	TR	
Volume	293	1503	67	100	914	113	116	709	30	235	828	60
Lane Width	12.0	12.0	12.0	12.0	12.0		12.0	12.0		12.0	12.0	
RTOR Vol			0			0			0			0

Duration 0.25 Area Type: All other areas

Signal Operations

Phase Combination	1	2	3	4		5	6	7	8
EB Left	A	A			NB Left	A	A		
Thru		A			Thru		A		
Right		A			Right		A		
Peds					Peds				
WB Left	A	A			SB Left	A	A		
Thru		A			Thru		A		
Right		A			Right		A		
Peds					Peds				
NB Right					EB Right				
SB Right					WB Right				
Green	6.0	73.0				10.0	35.0		
Yellow	3.0	4.0				3.0	4.0		
All Red	0.0	0.8				0.0	1.2		

Cycle Length: 140.0 secs

Intersection Performance Summary

Appr/ Lane Grp	Lane Group Capacity	Adj Sat Flow Rate (s)	Ratios v/c	Ratios g/C	Lane Group Delay	Lane Group LOS	Approach Delay	Approach LOS
Eastbound								
L	267	1770	1.15	0.59	148.1	F		
T	1850	3547	0.86	0.52	33.1	C	50.6	D
R	825	1583	0.09	0.52	16.8	B		
Westbound								
L	129	1770	0.81	0.59	62.4	E		
TR	2602	4990	0.42	0.52	20.6	C	24.3	C
Northbound								
L	179	1770	0.68	0.34	47.0	D		
TR	881	3525	0.88	0.25	61.0	E	59.1	E
Southbound								
L	179	1770	1.38	0.34	248.2	F		
TR	878	3511	1.06	0.25	101.7	F	132.3	F

Intersection Delay = 64.6 (sec/veh) Intersection LOS = E

HCS+: Signalized Intersections Release 5.2

Analyst: Vargas
Agency: Traf Tech Engineering, Inc.
Date: 10/26/11
Period: AM Peak Hour
Project ID:
E/W St: Bird Road

Inter.: Bird/Le Jeune
Area Type: All other areas
Jurisd: Coral Gables
Year : 2013 Background

N/S St: Le Jeune Road

SIGNALIZED INTERSECTION SUMMARY

	Eastbound			Westbound			Northbound			Southbound		
	L	T	R	L	T	R	L	T	R	L	T	R
No. Lanes	1	2	1	1	3	0	1	2	0	1	2	0
LGConfig	L	T	R	L	TR		L	TR		L	TR	
Volume	305	1572	70	108	951	118	126	748	31	255	859	62
Lane Width	12.0	12.0	12.0	12.0	12.0		12.0	12.0		12.0	12.0	
RTOR Vol			0			0			0			0

Duration 0.25 Area Type: All other areas

Signal Operations

Phase Combination	1	2	3	4			5	6	7	8
EB Left	A	A			NB	Left	A	A		
Thru		A				Thru		A		
Right		A				Right		A		
Peds						Peds				
WB Left	A	A			SB	Left	A	A		
Thru		A				Thru		A		
Right		A				Right		A		
Peds						Peds				
NB Right					EB	Right				
SB Right					WB	Right				
Green	6.0	73.0					10.0	35.0		
Yellow	3.0	4.0					3.0	4.0		
All Red	0.0	0.8					0.0	1.2		

Cycle Length: 140.0 secs

Intersection Performance Summary

Appr/ Lane Grp	Lane Group Capacity	Adj Sat Flow Rate (s)	Ratios v/c	Ratios g/C	Lane Group Delay	Lane Group LOS	Approach Delay	Approach LOS
Eastbound								
L	255	1770	1.26	0.59	190.3	F		
T	1850	3547	0.89	0.52	36.2	D	59.6	E
R	825	1583	0.09	0.52	16.9	B		
Westbound								
L	129	1770	0.88	0.59	81.2	F		
TR	2602	4990	0.43	0.52	20.8	C	26.4	C
Northbound								
L	179	1770	0.74	0.34	52.5	D		
TR	881	3525	0.93	0.25	67.5	E	65.4	E
Southbound								
L	179	1770	1.50	0.34	292.1	F		
TR	878	3511	1.10	0.25	115.3	F	153.6	F

Intersection Delay = 74.3 (sec/veh) Intersection LOS = E

HCS+: Signalized Intersections Release 5.2

Analyst: Vargas
Agency: Traf Tech Engineering, Inc.
Date: 10/26/11
Period: AM Peak Hour
Project ID:
E/W St: Bird Road

Inter.: Bird/Le Jeune
Area Type: All other areas
Jurisd: Coral Gables
Year : 2013 Total w/Project

N/S St: Le Jeune Road

SIGNALIZED INTERSECTION SUMMARY

	Eastbound			Westbound			Northbound			Southbound		
	L	T	R	L	T	R	L	T	R	L	T	R
No. Lanes	1	2	1	1	3	0	1	2	0	1	2	0
LGConfig	L	T	R	L	TR		L	TR		L	TR	
Volume	305	1577	70	108	951	118	143	777	31	255	867	62
Lane Width	12.0	12.0	12.0	12.0	12.0		12.0	12.0		12.0	12.0	
RTOR Vol			0			0			0			0

Duration 0.25 Area Type: All other areas

Signal Operations

Phase Combination	1	2	3	4			5	6	7	8
EB Left	A	A			NB	Left	A	A		
Thru		A				Thru		A		
Right		A				Right		A		
Peds						Peds				
WB Left	A	A			SB	Left	A	A		
Thru		A				Thru		A		
Right		A				Right		A		
Peds						Peds				
NB Right					EB	Right				
SB Right					WB	Right				
Green	6.0	73.0					10.0	35.0		
Yellow	3.0	4.0					3.0	4.0		
All Red	0.0	0.8					0.0	1.2		

Cycle Length: 140.0 secs

Intersection Performance Summary

Appr/ Lane Grp	Lane Group Capacity	Adj Sat Flow Rate (s)	Ratios v/c	Ratios g/C	Lane Group Delay	Lane Group LOS	Approach Delay	Approach LOS
Eastbound								
L	255	1770	1.26	0.59	190.3	F		
T	1850	3547	0.90	0.52	36.4	D	59.7	E
R	825	1583	0.09	0.52	16.9	B		
Westbound								
L	129	1770	0.88	0.59	81.3	F		
TR	2602	4990	0.43	0.52	20.8	C	26.4	C
Northbound								
L	179	1770	0.84	0.34	66.6	E		
TR	882	3526	0.96	0.25	74.0	E	72.9	E
Southbound								
L	179	1770	1.50	0.34	290.3	F		
TR	878	3511	1.11	0.25	119.2	F	156.0	F

Intersection Delay = 76.3 (sec/veh) Intersection LOS = E

HCS+: Signalized Intersections Release 5.2

Analyst: Vargas
Agency: Traf Tech Engineering, Inc.
Date: 10/26/11
Period: PM Peak Hour
Project ID:
E/W St: Bird Road

Inter.: Bird/Le Jeune
Area Type: All other areas
Jurisd: Coral Gables
Year : 2011 Existing

N/S St: Le Jeune Road

SIGNALIZED INTERSECTION SUMMARY

	Eastbound			Westbound			Northbound			Southbound		
	L	T	R	L	T	R	L	T	R	L	T	R
No. Lanes	1	2	1	1	3	0	1	2	0	1	2	0
LGConfig	L	T	R	L	TR		L	TR		L	TR	
Volume	160	1091	79	104	1450	156	147	761	63	157	820	156
Lane Width	12.0	12.0	12.0	12.0	12.0		12.0	12.0		12.0	12.0	
RTOR Vol			0			0			0			0

Duration 0.25 Area Type: All other areas

Signal Operations

Phase Combination	1	2	3	4			5	6	7	8
EB Left	A	A			NB	Left	A	A		
Thru		A				Thru		A		
Right		A				Right		A		
Peds						Peds				
WB Left	A	A			SB	Left	A	A		
Thru		A				Thru		A		
Right		A				Right		A		
Peds						Peds				
NB Right					EB	Right				
SB Right					WB	Right				
Green	7.0	67.0					7.0	43.0		
Yellow	3.0	4.0					3.0	4.0		
All Red	0.0	0.8					0.0	1.2		

Cycle Length: 140.0 secs

Intersection Performance Summary

Appr/ Lane Grp	Lane Group Capacity	Adj Sat Flow Rate (s)	Ratios v/c	Ratios g/C	Lane Group Delay	Lane Group LOS	Approach Delay	Approach LOS
Eastbound								
L	145	1770	1.16	0.55	158.7	F		
T	1697	3547	0.68	0.48	29.2	C	44.2	D
R	758	1583	0.11	0.48	20.1	C		
Westbound								
L	199	1770	0.55	0.55	24.6	C		
TR	2393	5000	0.71	0.48	29.7	C	29.4	C
Northbound								
L	142	1770	1.09	0.38	141.5	F		
TR	1077	3506	0.81	0.31	49.2	D	63.2	E
Southbound								
L	146	1770	1.13	0.38	166.4	F		
TR	1063	3462	0.97	0.31	67.6	E	81.3	F

Intersection Delay = 51.1 (sec/veh) Intersection LOS = D

HCS+: Signalized Intersections Release 5.2

Analyst: Vargas
Agency: Traf Tech Engineering, Inc.
Date: 10/26/11
Period: PM Peak Hour
Project ID:
E/W St: Bird Road

Inter.: Bird/Le Jeune
Area Type: All other areas
Jurisd: Coral Gables
Year : 2013 Background

N/S St: Le Jeune Road

SIGNALIZED INTERSECTION SUMMARY

	Eastbound			Westbound			Northbound			Southbound		
	L	T	R	L	T	R	L	T	R	L	T	R
No. Lanes	1	2	1	1	3	0	1	2	0	1	2	0
LGConfig	L	T	R	L	TR		L	TR		L	TR	
Volume	166	1150	82	116	1509	162	169	812	66	181	853	162
Lane Width	12.0	12.0	12.0	12.0	12.0		12.0	12.0		12.0	12.0	
RTOR Vol			0			0			0			0

Duration 0.25 Area Type: All other areas

Signal Operations

Phase Combination	1	2	3	4		5	6	7	8
EB Left	A	A			NB Left	A	A		
Thru		A			Thru		A		
Right		A			Right		A		
Peds					Peds				
WB Left	A	A			SB Left	A	A		
Thru		A			Thru		A		
Right		A			Right		A		
Peds					Peds				
NB Right					EB Right				
SB Right					WB Right				
Green	7.0	67.0				7.0	43.0		
Yellow	3.0	4.0				3.0	4.0		
All Red	0.0	0.8				0.0	1.2		

Cycle Length: 140.0 secs

Intersection Performance Summary

Appr/ Lane Grp	Lane Group Capacity	Adj Sat Flow Rate (s)	Ratios v/c	Ratios g/C	Lane Group Delay	Lane Group LOS	Approach Delay	Approach LOS
Eastbound								
L	142	1770	1.23	0.55	187.4	F		
T	1697	3547	0.71	0.48	30.3	C	48.4	D
R	758	1583	0.11	0.48	20.2	C		
Westbound								
L	182	1770	0.67	0.55	32.3	C		
TR	2393	5000	0.74	0.48	30.6	C	30.7	C
Northbound								
L	142	1770	1.25	0.38	191.0	F		
TR	1077	3507	0.86	0.31	52.7	D	75.0	E
Southbound								
L	142	1770	1.35	0.38	244.5	F		
TR	1063	3462	1.01	0.31	77.5	E	102.8	F

Intersection Delay = 59.7 (sec/veh) Intersection LOS = E

HCS+: Signalized Intersections Release 5.2

Analyst: Vargas
Agency: Traf Tech Engineering, Inc.
Date: 10/26/11
Period: PM Peak Hour
Project ID:
E/W St: Bird Road

Inter.: Bird/Le Jeune
Area Type: All other areas
Jurisd: Coral Gables
Year : 2013 Total w/Project

N/S St: Le Jeune Road

SIGNALIZED INTERSECTION SUMMARY

	Eastbound			Westbound			Northbound			Southbound		
	L	T	R	L	T	R	L	T	R	L	T	R
No. Lanes	1	2	1	1	3	0	1	2	0	1	2	0
LGConfig	L	T	R	L	TR		L	TR		L	TR	
Volume	166	1174	82	116	1509	162	182	833	66	181	892	162
Lane Width	12.0	12.0	12.0	12.0	12.0		12.0	12.0		12.0	12.0	
RTOR Vol			0			0			0			0

Duration 0.25 Area Type: All other areas

Signal Operations

Phase Combination	1	2	3	4		5	6	7	8
EB Left	A	A			NB Left	A	A		
Thru		A			Thru		A		
Right		A			Right		A		
Peds					Peds				
WB Left	A	A			SB Left	A	A		
Thru		A			Thru		A		
Right		A			Right		A		
Peds					Peds				
NB Right					EB Right				
SB Right					WB Right				
Green	7.0	67.0				7.0	43.0		
Yellow	3.0	4.0				3.0	4.0		
All Red	0.0	0.8				0.0	1.2		

Cycle Length: 140.0 secs

Intersection Performance Summary

Appr/ Lane Grp	Lane Group Capacity	Adj Sat Flow Rate (s)	Ratios v/c	Ratios g/C	Lane Group Delay	Lane Group LOS	Approach Delay	Approach LOS
Eastbound								
L	142	1770	1.23	0.55	187.4	F		
T	1697	3547	0.73	0.48	30.8	C	48.5	D
R	758	1583	0.11	0.48	20.2	C		
Westbound								
L	176	1770	0.69	0.55	34.9	C		
TR	2393	5000	0.74	0.48	30.6	C	30.9	C
Northbound								
L	142	1770	1.35	0.38	235.1	F		
TR	1077	3508	0.88	0.31	54.5	D	85.0	F
Southbound								
L	142	1770	1.35	0.38	242.9	F		
TR	1064	3465	1.04	0.31	88.0	F	110.8	F

Intersection Delay = 63.9 (sec/veh) Intersection LOS = E

HCS+: Signalized Intersections Release 5.2

Analyst: Vargas
Agency: Traf Tech Engineering, Inc.
Date: 10/26/11
Period: AM Peak Hour
Project ID:
E/W St: Altara Avenue

Inter.: Le Jeune/Altara
Area Type: All other areas
Jurisd: Coral Gables
Year : 2011 Existing

N/S St: Le Jeune Road

SIGNALIZED INTERSECTION SUMMARY

	Eastbound			Westbound			Northbound			Southbound		
	L	T	R	L	T	R	L	T	R	L	T	R
No. Lanes	0	1	0	0	1	0	1	2	0	1	2	0
LGConfig		LTR			LTR		L	TR		L	TR	
Volume	4	1	0	51	14	82	46	604	88	69	597	41
Lane Width		12.0			12.0		12.0	12.0		12.0	12.0	
RTOR Vol			0			0			0			0

Duration 0.25 Area Type: All other areas

Signal Operations

Phase Combination	1	2	3	4			5	6	7	8
EB Left	A				NB	Left	A			
Thru	A					Thru	A			
Right	A					Right	A			
Peds						Peds				
WB Left	A				SB	Left	A			
Thru	A					Thru	A			
Right	A					Right	A			
Peds						Peds				
NB Right					EB	Right				
SB Right					WB	Right				
Green	21.0						100.0			
Yellow	4.0						4.0			
All Red	0.6						0.4			

Cycle Length: 130.0 secs

Intersection Performance Summary

Appr/ Lane Grp	Lane Group Capacity	Adj Sat Flow Rate (s)	Ratios v/c	Ratios g/C	Lane Group Delay	Lane Group LOS	Approach Delay	Approach LOS
Eastbound								
LTR	243	1507	0.03	0.16	46.0	D	46.0	D
Westbound								
LTR	245	1519	0.87	0.16	79.9	E	79.9	E
Northbound								
L	414	538	0.16	0.77	4.1	A		
TR	2676	3479	0.37	0.77	5.0	A	4.9	A
Southbound								
L	378	491	0.26	0.77	4.7	A		
TR	2702	3513	0.34	0.77	4.8	A	4.8	A

Intersection Delay = 11.9 (sec/veh) Intersection LOS = B

HCS+: Signalized Intersections Release 5.2

Analyst: Vargas
Agency: Traf Tech Engineering, Inc.
Date: 10/26/11
Period: AM Peak Hour
Project ID:
E/W St: Altara Avenue

Inter.: Le Jeune/Altara
Area Type: All other areas
Jurisd: Coral Gables
Year : 2013 Background

N/S St: Le Jeune Road

SIGNALIZED INTERSECTION SUMMARY

	Eastbound			Westbound			Northbound			Southbound		
	L	T	R	L	T	R	L	T	R	L	T	R
No. Lanes	0	1	0	0	1	0	1	2	0	1	2	0
LGConfig		LTR			LTR		L	TR		L	TR	
Volume	4	1	0	53	15	85	48	632	92	72	624	43
Lane Width		12.0			12.0		12.0	12.0		12.0	12.0	
RTOR Vol			0			0			0			0

Duration 0.25 Area Type: All other areas

Signal Operations

Phase Combination	1	2	3	4			5	6	7	8
EB Left	A				NB	Left	A			
Thru	A					Thru	A			
Right	A					Right	A			
Peds						Peds				
WB Left	A				SB	Left	A			
Thru	A					Thru	A			
Right	A					Right	A			
Peds						Peds				
NB Right					EB	Right				
SB Right					WB	Right				
Green	21.0						100.0			
Yellow	4.0						4.0			
All Red	0.6						0.4			

Cycle Length: 130.0 secs

Intersection Performance Summary

Appr/ Lane Grp	Lane Group Capacity	Adj Sat Flow Rate (s)	Ratios v/c	Ratios g/C	Lane Group Delay	Lane Group LOS	Approach Delay	Approach LOS
Eastbound								
LTR	240	1485	0.03	0.16	46.0	D	46.0	D
Westbound								
LTR	246	1520	0.90	0.16	86.3	F	86.3	F
Northbound								
L	395	513	0.18	0.77	4.2	A		
TR	2676	3479	0.39	0.77	5.1	A	5.0	A
Southbound								
L	358	465	0.29	0.77	4.9	A		
TR	2702	3513	0.36	0.77	4.9	A	4.9	A

Intersection Delay = 12.5 (sec/veh) Intersection LOS = B

HCS+: Signalized Intersections Release 5.2

Analyst: Vargas
Agency: Traf Tech Engineering, Inc.
Date: 10/26/11
Period: AM Peak Hour
Project ID:
E/W St: Altara Avenue

Inter.: Le Jeune/Altara
Area Type: All other areas
Jurisd: Coral Gables
Year : 2013 Total w/Project

N/S St: Le Jeune Road

SIGNALIZED INTERSECTION SUMMARY

	Eastbound			Westbound			Northbound			Southbound		
	L	T	R	L	T	R	L	T	R	L	T	R
No. Lanes	0	1	0	0	1	0	1	2	0	1	2	0
LGConfig		LTR			LTR		L	TR		L	TR	
Volume	4	1	0	70	15	131	48	632	97	80	624	43
Lane Width		12.0			12.0		12.0	12.0		12.0	12.0	
RTOR Vol			0			0			0			0

Duration 0.25 Area Type: All other areas

Signal Operations

Phase Combination	1	2	3	4			5	6	7	8
EB Left	A				NB	Left	A			
Thru	A					Thru	A			
Right	A					Right	A			
Peds						Peds				
WB Left	A				SB	Left	A			
Thru	A					Thru	A			
Right	A					Right	A			
Peds						Peds				
NB Right					EB	Right				
SB Right					WB	Right				
Green	21.0						100.0			
Yellow	4.0						4.0			
All Red	0.6						0.4			

Cycle Length: 130.0 secs

Intersection Performance Summary

Appr/ Lane Grp	Lane Group Capacity	Adj Sat Flow Rate (s)	Ratios v/c	Ratios g/C	Lane Group Delay	Lane Group LOS	Approach Delay	Approach LOS
Eastbound								
LTR	212	1312	0.03	0.16	46.0	D	46.0	D
Westbound								
LTR	246	1521	1.27	0.16	204.9	F	204.9	F
Northbound								
L	395	513	0.18	0.77	4.2	A		
TR	2674	3476	0.40	0.77	5.1	A	5.0	A
Southbound								
L	354	460	0.33	0.77	5.2	A		
TR	2702	3513	0.36	0.77	4.9	A	4.9	A

Intersection Delay = 29.8 (sec/veh) Intersection LOS = C

HCS+: Signalized Intersections Release 5.2

Analyst: Vargas
Agency: Traf Tech Engineering, Inc.
Date: 10/26/11
Period: AM Peak Hour
Project ID: Timing Update
E/W St: Altara Avenue

Inter.: Le Jeune/Altara
Area Type: All other areas
Jurisd: Coral Gables
Year : 2013 Total w/Project

N/S St: Le Jeune Road

SIGNALIZED INTERSECTION SUMMARY

	Eastbound			Westbound			Northbound			Southbound		
	L	T	R	L	T	R	L	T	R	L	T	R
No. Lanes	0	1	0	0	1	0	1	2	0	1	2	0
LGConfig		LTR			LTR		L	TR		L	TR	
Volume	4	1	0	70	15	131	48	632	97	80	624	43
Lane Width		12.0			12.0		12.0	12.0		12.0	12.0	
RTOR Vol			0			0			0			0

Duration 0.25 Area Type: All other areas

Signal Operations

Phase Combination	1	2	3	4			5	6	7	8
EB Left	A				NB	Left	A			
Thru	A					Thru	A			
Right	A					Right	A			
Peds						Peds				
WB Left	A				SB	Left	A			
Thru	A					Thru	A			
Right	A					Right	A			
Peds						Peds				
NB Right					EB	Right				
SB Right					WB	Right				
Green	36.0						85.0			
Yellow	4.0						4.0			
All Red	0.6						0.4			

Cycle Length: 130.0 secs

Intersection Performance Summary

Appr/ Lane Grp	Lane Group Capacity	Adj Sat Flow Rate (s)	Ratios v/c	Ratios g/C	Lane Group Delay	Lane Group LOS	Approach Delay	Approach LOS
Eastbound								
LTR	424	1531	0.02	0.28	34.2	C	34.2	C
Westbound								
LTR	422	1524	0.74	0.28	49.7	D	49.7	D
Northbound								
L	305	467	0.23	0.65	9.5	A		
TR	2273	3476	0.47	0.65	11.3	B	11.2	B
Southbound								
L	269	412	0.43	0.65	12.0	B		
TR	2297	3513	0.42	0.65	10.9	B	11.0	B

Intersection Delay = 15.9 (sec/veh) Intersection LOS = B

HCS+: Signalized Intersections Release 5.2

Analyst: Vargas
Agency: Traf Tech Engineering, Inc.
Date: 10/26/11
Period: PM Peak Hour
Project ID:
E/W St: Altara Avenue

Inter.: Le Jeune/Altara
Area Type: All other areas
Jurisd: Coral Gables
Year : 2011 Existing

N/S St: Le Jeune Road

SIGNALIZED INTERSECTION SUMMARY

	Eastbound			Westbound			Northbound			Southbound		
	L	T	R	L	T	R	L	T	R	L	T	R
No. Lanes	0	1	0	0	1	0	1	2	0	1	2	0
LGConfig		LTR			LTR		L	TR		L	TR	
Volume	25	11	16	112	26	156	25	871	53	42	932	60
Lane Width		12.0			12.0		12.0	12.0		12.0	12.0	
RTOR Vol			0			0			0			0

Duration 0.25 Area Type: All other areas

Signal Operations

Phase Combination	1	2	3	4			5	6	7	8
EB Left	A				NB	Left	A			
Thru	A					Thru	A			
Right	A					Right	A			
Peds						Peds				
WB Left	A				SB	Left	A			
Thru	A					Thru	A			
Right	A					Right	A			
Peds						Peds				
NB Right					EB	Right				
SB Right					WB	Right				
Green	22.0						99.0			
Yellow	4.0						4.0			
All Red	0.6						0.4			

Cycle Length: 130.0 secs

Intersection Performance Summary

Appr/ Lane Grp	Lane Group Capacity	Adj Sat Flow Rate (s)	Ratios v/c	Ratios g/C	Lane Group Delay	Lane Group LOS	Approach Delay	Approach LOS
Eastbound								
LTR	201	1189	0.28	0.17	47.8	D	47.8	D
Westbound								
LTR	252	1491	1.27	0.17	202.8	F	202.8	F
Northbound								
L	340	446	0.08	0.76	4.0	A		
TR	2678	3516	0.38	0.76	5.3	A	5.2	A
Southbound								
L	371	487	0.12	0.76	4.2	A		
TR	2677	3515	0.40	0.76	5.4	A	5.4	A

Intersection Delay = 31.2 (sec/veh) Intersection LOS = C

HCS+: Signalized Intersections Release 5.2

Analyst: Vargas
Agency: Traf Tech Engineering, Inc.
Date: 10/26/11
Period: PM Peak Hour
Project ID:
E/W St: Altara Avenue

Inter.: Le Jeune/Altara
Area Type: All other areas
Jurisd: Coral Gables
Year : 2013 Background

N/S St: Le Jeune Road

SIGNALIZED INTERSECTION SUMMARY

	Eastbound			Westbound			Northbound			Southbound		
	L	T	R	L	T	R	L	T	R	L	T	R
No. Lanes	0	1	0	0	1	0	1	2	0	1	2	0
LGConfig		LTR			LTR		L	TR		L	TR	
Volume	26	11	17	117	27	162	26	914	55	44	978	62
Lane Width		12.0			12.0		12.0	12.0		12.0	12.0	
RTOR Vol			0			0			0			0

Duration 0.25 Area Type: All other areas

Signal Operations

Phase Combination	1	2	3	4			5	6	7	8
EB Left	A				NB	Left	A			
Thru	A					Thru	A			
Right	A					Right	A			
Peds						Peds				
WB Left	A				SB	Left	A			
Thru	A					Thru	A			
Right	A					Right	A			
Peds						Peds				
NB Right					EB	Right				
SB Right					WB	Right				
Green	22.0						99.0			
Yellow	4.0						4.0			
All Red	0.6						0.4			

Cycle Length: 130.0 secs

Intersection Performance Summary

Appr/ Lane Grp	Lane Group Capacity	Adj Sat Flow Rate (s)	Ratios v/c	Ratios g/C	Lane Group Delay	Lane Group LOS	Approach Delay	Approach LOS
Eastbound								
LTR	199	1177	0.29	0.17	48.0	D	48.0	D
Westbound								
LTR	252	1487	1.32	0.17	222.1	F	222.1	F
Northbound								
L	319	419	0.09	0.76	4.1	A		
TR	2678	3516	0.39	0.76	5.4	A	5.3	A
Southbound								
L	350	460	0.14	0.76	4.3	A		
TR	2677	3515	0.42	0.76	5.6	A	5.5	A

Intersection Delay = 33.5 (sec/veh) Intersection LOS = C

HCS+: Signalized Intersections Release 5.2

Analyst: Vargas
Agency: Traf Tech Engineering, Inc.
Date: 10/26/11
Period: PM Peak Hour
Project ID:
E/W St: Altara Avenue

Inter.: Le Jeune/Altara
Area Type: All other areas
Jurisd: Coral Gables
Year : 2013 Total w/Project

N/S St: Le Jeune Road

SIGNALIZED INTERSECTION SUMMARY

	Eastbound			Westbound			Northbound			Southbound		
	L	T	R	L	T	R	L	T	R	L	T	R
No. Lanes	0	1	0	0	1	0	1	2	0	1	2	0
LGConfig		LTR			LTR		L	TR		L	TR	
Volume	26	11	17	130	27	196	26	914	79	83	978	62
Lane Width		12.0			12.0		12.0	12.0		12.0	12.0	
RTOR Vol			0			0			0			0

Duration 0.25 Area Type: All other areas

Signal Operations

Phase Combination	1	2	3	4			5	6	7	8
EB Left	A				NB	Left	A			
Thru	A					Thru	A			
Right	A					Right	A			
Peds						Peds				
WB Left	A				SB	Left	A			
Thru	A					Thru	A			
Right	A					Right	A			
Peds						Peds				
NB Right					EB	Right				
SB Right					WB	Right				
Green	22.0						99.0	0.0		
Yellow	4.0						4.0			
All Red	0.6						0.4			

Cycle Length: 130.0 secs

Intersection Performance Summary

Appr/ Lane Grp	Lane Group Capacity	Adj Sat Flow Rate (s)	Ratios v/c	Ratios g/C	Lane Group Delay	Lane Group LOS	Approach Delay	Approach LOS
Eastbound								
LTR	196	1158	0.30	0.17	48.1	D	48.1	D
Westbound								
LTR	252	1489	1.52	0.17	307.2	F	307.2	F
Northbound								
L	319	419	0.09	0.76	4.1	A		
TR	2668	3504	0.40	0.76	5.4	A	5.4	A
Southbound								
L	339	445	0.27	0.76	5.1	A		
TR	2677	3515	0.42	0.76	5.6	A	5.5	A

Intersection Delay = 48.1 (sec/veh) Intersection LOS = D

HCS+: Signalized Intersections Release 5.2

Analyst: Vargas
Agency: Traf Tech Engineering, Inc.
Date: 10/26/11
Period: PM Peak Hour
Project ID: Timing Update
E/W St: Altara Avenue

Inter.: Le Jeune/Altara
Area Type: All other areas
Jurisd: Coral Gables
Year : 2013 Total w/Project

N/S St: Le Jeune Road

SIGNALIZED INTERSECTION SUMMARY

	Eastbound			Westbound			Northbound			Southbound		
	L	T	R	L	T	R	L	T	R	L	T	R
No. Lanes	0	1	0	0	1	0	1	2	0	1	2	0
LGConfig		LTR			LTR		L	TR		L	TR	
Volume	26	11	17	130	27	196	26	914	79	83	978	62
Lane Width		12.0			12.0		12.0	12.0		12.0	12.0	
RTOR Vol			0			0			0			0

Duration 0.25 Area Type: All other areas

Signal Operations

Phase Combination	1	2	3	4			5	6	7	8
EB Left	A				NB	Left	A			
Thru	A					Thru	A			
Right	A					Right	A			
Peds						Peds				
WB Left	A				SB	Left	A			
Thru	A					Thru	A			
Right	A					Right	A			
Peds						Peds				
NB Right					EB	Right				
SB Right					WB	Right				
Green	41.0						80.0	0.0		
Yellow	4.0						4.0			
All Red	0.6						0.4			

Cycle Length: 130.0 secs

Intersection Performance Summary

Appr/ Lane Grp	Lane Group Capacity	Adj Sat Flow Rate (s)	Ratios v/c	Ratios g/C	Lane Group Delay	Lane Group LOS	Approach Delay	Approach LOS
Eastbound								
LTR	429	1361	0.14	0.32	32.0	C	32.0	C
Westbound								
LTR	466	1479	0.82	0.32	52.4	D	52.4	D
Northbound								
L	216	351	0.13	0.62	10.7	B		
TR	2156	3504	0.50	0.62	14.1	B	14.0	B
Southbound								
L	234	380	0.38	0.62	13.7	B		
TR	2163	3515	0.52	0.62	14.4	B	14.3	B

Intersection Delay = 19.8 (sec/veh) Intersection LOS = B

TWO-WAY STOP CONTROL SUMMARY

General Information		Site Information	
Analyst	*Vargas*	Intersection	*Bird/Salzedo*
Agency/Co.	*Traf Tech Engineering, Inc.*	Jurisdiction	*Coral Gables*
Date Performed	*9/28/2011*	Analysis Year	*2011 Existing*
Analysis Time Period	*AM Peak Hour*		

Project Description

East/West Street: *Bird Road* | North/South Street: *Salzedo Street*

Intersection Orientation: *East-West* | Study Period (hrs): *0.25*

Vehicle Volumes and Adjustments

Major Street	Eastbound			Westbound		
Movement	1	2	3	4	5	6
	L	T	R	L	T	R
Volume (veh/h)		*1634*	*11*		*736*	
Peak-Hour Factor, PHF	*0.93*	*0.93*	*0.93*	*0.93*	*0.93*	*0.93*
Hourly Flow Rate, HFR (veh/h)	*0*	*1756*	*11*	*0*	*791*	*0*
Percent Heavy Vehicles	*0*	--	--	*0*	--	--
Median Type	*Raised curb*					
RT Channelized			*0*			*0*
Lanes	*0*	*2*	*1*	*0*	*2*	*0*
Configuration		*T*	*R*		*T*	
Upstream Signal		*0*			*0*	

Minor Street	Northbound			Southbound		
Movement	7	8	9	10	11	12
	L	T	R	L	T	R
Volume (veh/h)	*3*		*15*			
Peak-Hour Factor, PHF	*0.93*	*0.93*	*0.93*	*0.93*	*0.93*	*0.93*
Hourly Flow Rate, HFR (veh/h)	*3*	*0*	*16*	*0*	*0*	*0*
Percent Heavy Vehicles	*2*	*0*	*2*	*0*	*0*	*0*
Percent Grade (%)		*0*			*0*	
Flared Approach		*N*			*N*	
Storage		*0*			*0*	
RT Channelized			*0*			*0*
Lanes	*0*	*0*	*0*	*0*	*0*	*0*
Configuration		*LR*				

Delay, Queue Length, and Level of Service

Approach	Eastbound	Westbound	Northbound			Southbound		
Movement	1	4	7	8	9	10	11	12
Lane Configuration				*LR*				
v (veh/h)				*19*				
C (m) (veh/h)				*227*				
v/c				*0.08*				
95% queue length				*0.27*				
Control Delay (s/veh)				*22.3*				
LOS				*C*				
Approach Delay (s/veh)	--	--	*22.3*					
Approach LOS	--	--	*C*					

Copyright © 2005 University of Florida, All Rights Reserved *HCS+*™ Version 5.2 Generated: 9/28/2011 2:47 PM

TWO-WAY STOP CONTROL SUMMARY

General Information		Site Information	
Analyst	*Vargas*	Intersection	*Bird/Salzedo*
Agency/Co.	*Traf Tech Engineering, Inc.*	Jurisdiction	*Coral Gables*
Date Performed	*9/28/2011*	Analysis Year	*2013 Background*
Analysis Time Period	*AM Peak Hour*		

Project Description

East/West Street: *Bird Road* | North/South Street: *Salzedo Street*

Intersection Orientation: *East-West* | Study Period (hrs): *0.25*

Vehicle Volumes and Adjustments

Major Street	Eastbound			Westbound		
Movement	1	2	3	4	5	6
	L	T	R	L	T	R
Volume (veh/h)		*1704*	*11*		*769*	
Peak-Hour Factor, PHF	*0.93*	*0.93*	*0.93*	*0.93*	*0.93*	*0.93*
Hourly Flow Rate, HFR (veh/h)	*0*	*1832*	*11*	*0*	*826*	*0*
Percent Heavy Vehicles	*0*	--	--	*0*	--	--
Median Type	*Raised curb*					
RT Channelized			*0*			*0*
Lanes	*0*	*2*	*1*	*0*	*2*	*0*
Configuration		*T*	*R*		*T*	
Upstream Signal		*0*			*0*	

Minor Street	Northbound			Southbound		
Movement	7	8	9	10	11	12
	L	T	R	L	T	R
Volume (veh/h)	*3*		*16*			
Peak-Hour Factor, PHF	*0.93*	*0.93*	*0.93*	*0.93*	*0.93*	*0.93*
Hourly Flow Rate, HFR (veh/h)	*3*	*0*	*17*	*0*	*0*	*0*
Percent Heavy Vehicles	*2*	*0*	*2*	*0*	*0*	*0*
Percent Grade (%)		*0*			*0*	
Flared Approach		*N*			*N*	
Storage		*0*			*0*	
RT Channelized			*0*			*0*
Lanes	*0*	*0*	*0*	*0*	*0*	*0*
Configuration		*LR*				

Delay, Queue Length, and Level of Service

Approach	Eastbound	Westbound	Northbound			Southbound		
Movement	1	4	7	8	9	10	11	12
Lane Configuration				*LR*				
v (veh/h)				*20*				
C (m) (veh/h)				*214*				
v/c				*0.09*				
95% queue length				*0.31*				
Control Delay (s/veh)				*23.5*				
LOS				*C*				
Approach Delay (s/veh)	--	--	*23.5*					
Approach LOS	--	--	*C*					

Copyright © 2005 University of Florida, All Rights Reserved *HCS+*™ Version 5.2 Generated: 9/28/2011 2:47 PM

TWO-WAY STOP CONTROL SUMMARY

General Information		Site Information	
Analyst	*Vargas*	Intersection	*Bird/Salzedo*
Agency/Co.	*Traf Tech Engineering, Inc.*	Jurisdiction	*Coral Gables*
Date Performed	*9/28/2011*	Analysis Year	*2013 Total w/Project*
Analysis Time Period	*AM Peak Hour*		

Project Description

East/West Street: *Bird Road* | North/South Street: *Salzedo Street*

Intersection Orientation: *East-West* | Study Period (hrs): *0.25*

Vehicle Volumes and Adjustments

Major Street	Eastbound			Westbound		
Movement	1	2	3	4	5	6
	L	T	R	L	T	R
Volume (veh/h)		*1720*	*11*		*769*	
Peak-Hour Factor, PHF	*0.93*	*0.93*	*0.93*	*0.93*	*0.93*	*0.93*
Hourly Flow Rate, HFR (veh/h)	*0*	*1849*	*11*	*0*	*826*	*0*
Percent Heavy Vehicles	*0*	--	--	*0*	--	--
Median Type	*Raised curb*					
RT Channelized			*0*			*0*
Lanes	*0*	*2*	*1*	*0*	*2*	*0*
Configuration		*T*	*R*		*T*	
Upstream Signal		*0*			*0*	

Minor Street	Northbound			Southbound		
Movement	7	8	9	10	11	12
	L	T	R	L	T	R
Volume (veh/h)	*3*		*16*			
Peak-Hour Factor, PHF	*0.93*	*0.93*	*0.93*	*0.93*	*0.93*	*0.93*
Hourly Flow Rate, HFR (veh/h)	*3*	*0*	*17*	*0*	*0*	*0*
Percent Heavy Vehicles	*2*	*0*	*2*	*0*	*0*	*0*
Percent Grade (%)		*0*			*0*	
Flared Approach		*N*			*N*	
Storage		*0*			*0*	
RT Channelized			*0*			*0*
Lanes	*0*	*0*	*0*	*0*	*0*	*0*
Configuration		*LR*				

Delay, Queue Length, and Level of Service

Approach	Eastbound	Westbound	Northbound			Southbound		
Movement	1	4	7	8	9	10	11	12
Lane Configuration				*LR*				
v (veh/h)				*20*				
C (m) (veh/h)				*211*				
v/c				*0.09*				
95% queue length				*0.31*				
Control Delay (s/veh)				*23.8*				
LOS				*C*				
Approach Delay (s/veh)	--	--	*23.8*					
Approach LOS	--	--	*C*					

Copyright © 2005 University of Florida, All Rights Reserved *HCS+*™ Version 5.2 Generated: 9/28/2011 2:48 PM

TWO-WAY STOP CONTROL SUMMARY

General Information		Site Information	
Analyst	*Vargas*	Intersection	*Bird/Salzedo*
Agency/Co.	*Traf Tech Engineering, Inc.*	Jurisdiction	*Coral Gables*
Date Performed	*9/28/2011*	Analysis Year	*2011 Existing*
Analysis Time Period	*PM Peak Hour*		

Project Description

East/West Street: *Bird Road*	North/South Street: *Salzedo Street*
Intersection Orientation: *East-West*	Study Period (hrs): *0.25*

Vehicle Volumes and Adjustments

Major Street	Eastbound			Westbound		
Movement	1	2	3	4	5	6
	L	T	R	L	T	R
Volume (veh/h)		*1201*	*21*		*1217*	
Peak-Hour Factor, PHF	*0.95*	*0.95*	*0.95*	*0.95*	*0.95*	*0.95*
Hourly Flow Rate, HFR (veh/h)	*0*	*1264*	*22*	*0*	*1281*	*0*
Percent Heavy Vehicles	*0*	--	--	*0*	--	--
Median Type	*Raised curb*					
RT Channelized			*0*			*0*
Lanes	*0*	*2*	*1*	*0*	*2*	*0*
Configuration		*T*	*R*		*T*	
Upstream Signal		*0*			*0*	

Minor Street	Northbound			Southbound		
Movement	7	8	9	10	11	12
	L	T	R	L	T	R
Volume (veh/h)	*14*		*25*			
Peak-Hour Factor, PHF	*0.95*	*0.95*	*0.95*	*0.95*	*0.95*	*0.95*
Hourly Flow Rate, HFR (veh/h)	*14*	*0*	*26*	*0*	*0*	*0*
Percent Heavy Vehicles	*2*	*0*	*2*	*0*	*0*	*0*
Percent Grade (%)		*0*			*0*	
Flared Approach		*N*			*N*	
Storage		*0*			*0*	
RT Channelized			*0*			*0*
Lanes	*0*	*0*	*0*	*0*	*0*	*0*
Configuration		*LR*				

Delay, Queue Length, and Level of Service

Approach	Eastbound	Westbound	Northbound			Southbound		
Movement	1	4	7	8	9	10	11	12
Lane Configuration				*LR*				
v (veh/h)				*40*				
C (m) (veh/h)				*274*				
v/c				*0.15*				
95% queue length				*0.50*				
Control Delay (s/veh)				*20.4*				
LOS				*C*				
Approach Delay (s/veh)	--	--	*20.4*					
Approach LOS	--	--	*C*					

Copyright © 2005 University of Florida, All Rights Reserved *HCS+*™ Version 5.2 Generated: 9/28/2011 2:48 PM

TWO-WAY STOP CONTROL SUMMARY

General Information		Site Information	
Analyst	*Vargas*	Intersection	*Bird/Salzedo*
Agency/Co.	*Traf Tech Engineering, Inc.*	Jurisdiction	*Coral Gables*
Date Performed	*9/28/2011*	Analysis Year	*2013 Background*
Analysis Time Period	*PM Peak Hour*		

Project Description

East/West Street: *Bird Road* | North/South Street: *Salzedo Street*

Intersection Orientation: *East-West* | Study Period (hrs): *0.25*

Vehicle Volumes and Adjustments

Major Street	Eastbound			Westbound		
Movement	1	2	3	4	5	6
	L	T	R	L	T	R
Volume (veh/h)		*1258*	*22*		*1272*	
Peak-Hour Factor, PHF	*0.95*	*0.95*	*0.95*	*0.95*	*0.95*	*0.95*
Hourly Flow Rate, HFR (veh/h)	*0*	*1324*	*23*	*0*	*1338*	*0*
Percent Heavy Vehicles	*0*	--	--	*0*	--	--
Median Type	*Raised curb*					
RT Channelized			*0*			*0*
Lanes	*0*	*2*	*1*	*0*	*2*	*0*
Configuration		*T*	*R*		*T*	
Upstream Signal		*0*			*0*	

Minor Street	Northbound			Southbound		
Movement	7	8	9	10	11	12
	L	T	R	L	T	R
Volume (veh/h)	*15*		*25*			
Peak-Hour Factor, PHF	*0.95*	*0.95*	*0.95*	*0.95*	*0.95*	*0.95*
Hourly Flow Rate, HFR (veh/h)	*15*	*0*	*26*	*0*	*0*	*0*
Percent Heavy Vehicles	*2*	*0*	*2*	*0*	*0*	*0*
Percent Grade (%)		*0*			*0*	
Flared Approach		*N*			*N*	
Storage		*0*			*0*	
RT Channelized			*0*			*0*
Lanes	*0*	*0*	*0*	*0*	*0*	*0*
Configuration		*LR*				

Delay, Queue Length, and Level of Service

Approach	Eastbound	Westbound	Northbound			Southbound		
Movement	1	4	7	8	9	10	11	12
Lane Configuration				*LR*				
v (veh/h)				*41*				
C (m) (veh/h)				*253*				
v/c				*0.16*				
95% queue length				*0.57*				
Control Delay (s/veh)				*22.0*				
LOS				*C*				
Approach Delay (s/veh)	--	--	*22.0*					
Approach LOS	--	--	*C*					

Copyright © 2005 University of Florida, All Rights Reserved *HCS+*™ Version 5.2 Generated: 9/28/2011 2:48 PM

TWO-WAY STOP CONTROL SUMMARY

General Information		Site Information	
Analyst	*Vargas*	Intersection	*Bird/Salzedo*
Agency/Co.	*Traf Tech Engineering, Inc.*	Jurisdiction	*Coral Gables*
Date Performed	*9/28/2011*	Analysis Year	*2013 Total w/Project*
Analysis Time Period	*PM Peak Hour*		

Project Description

East/West Street: *Bird Road* | North/South Street: *Salzedo Street*

Intersection Orientation: *East-West* | Study Period (hrs): *0.25*

Vehicle Volumes and Adjustments

Major Street	Eastbound			Westbound		
Movement	1	2	3	4	5	6
	L	T	R	L	T	R
Volume (veh/h)		*1270*	*22*		*1272*	
Peak-Hour Factor, PHF	*0.95*	*0.95*	*0.95*	*0.95*	*0.95*	*0.95*
Hourly Flow Rate, HFR (veh/h)	*0*	*1336*	*23*	*0*	*1338*	*0*
Percent Heavy Vehicles	*0*	--	--	*0*	--	--
Median Type	*Raised curb*					
RT Channelized			*0*			*0*
Lanes	*0*	*2*	*1*	*0*	*2*	*0*
Configuration		*T*	*R*		*T*	
Upstream Signal		*0*			*0*	

Minor Street	Northbound			Southbound		
Movement	7	8	9	10	11	12
	L	T	R	L	T	R
Volume (veh/h)	*15*		*26*			
Peak-Hour Factor, PHF	*0.95*	*0.95*	*0.95*	*0.95*	*0.95*	*0.95*
Hourly Flow Rate, HFR (veh/h)	*15*	*0*	*27*	*0*	*0*	*0*
Percent Heavy Vehicles	*2*	*0*	*2*	*0*	*0*	*0*
Percent Grade (%)		*0*			*0*	
Flared Approach		*N*			*N*	
Storage		*0*			*0*	
RT Channelized			*0*			*0*
Lanes	*0*	*0*	*0*	*0*	*0*	*0*
Configuration		*LR*				

Delay, Queue Length, and Level of Service

Approach	Eastbound	Westbound	Northbound			Southbound		
Movement	1	4	7	8	9	10	11	12
Lane Configuration				*LR*				
v (veh/h)				*42*				
C (m) (veh/h)				*253*				
v/c				*0.17*				
95% queue length				*0.58*				
Control Delay (s/veh)				*22.0*				
LOS				*C*				
Approach Delay (s/veh)	--	--	*22.0*					
Approach LOS	--	--	*C*					

Copyright © 2005 University of Florida, All Rights Reserved *HCS+*™ Version 5.2 Generated: 9/28/2011 2:49 PM

TWO-WAY STOP CONTROL SUMMARY

General Information		Site Information	
Analyst	*Vargas*	Intersection	*Altara/Laguna*
Agency/Co.	*Traf Tech Engineering, Inc.*	Jurisdiction	*Coral Gables*
Date Performed	*9/28/2011*	Analysis Year	*2011 Existing*
Analysis Time Period	*AM Peak Hour*		

Project Description

East/West Street: *Altara Avenue* | North/South Street: *Laguna Street*

Intersection Orientation: *East-West* | Study Period (hrs): *0.25*

Vehicle Volumes and Adjustments

Major Street	Eastbound			Westbound		
Movement	1	2	3	4	5	6
	L	T	R	L	T	R
Volume (veh/h)	*24*	*143*	*15*	*16*	*124*	*71*
Peak-Hour Factor, PHF	*0.53*	*0.53*	*0.53*	*0.53*	*0.53*	*0.53*
Hourly Flow Rate, HFR (veh/h)	*45*	*269*	*28*	*30*	*233*	*133*
Percent Heavy Vehicles	*2*	--	--	*2*	--	--
Median Type	*Undivided*					
RT Channelized			*0*			*0*
Lanes	*0*	*1*	*0*	*0*	*1*	*0*
Configuration	*LTR*			*LTR*		
Upstream Signal		*0*			*0*	

Minor Street	Northbound			Southbound		
Movement	7	8	9	10	11	12
	L	T	R	L	T	R
Volume (veh/h)	*4*	*7*	*16*	*3*	*7*	*11*
Peak-Hour Factor, PHF	*0.53*	*0.53*	*0.53*	*0.53*	*0.53*	*0.53*
Hourly Flow Rate, HFR (veh/h)	*7*	*13*	*30*	*5*	*13*	*20*
Percent Heavy Vehicles	*2*	*2*	*2*	*2*	*2*	*2*
Percent Grade (%)		*0*			*0*	
Flared Approach		*N*			*N*	
Storage		*0*			*0*	
RT Channelized			*0*			*0*
Lanes	*0*	*1*	*0*	*0*	*1*	*0*
Configuration		*LTR*			*LTR*	

Delay, Queue Length, and Level of Service

Approach	Eastbound	Westbound	Northbound			Southbound		
Movement	1	4	7	8	9	10	11	12
Lane Configuration	*LTR*	*LTR*		*LTR*			*LTR*	
v (veh/h)	*45*	*30*		*50*			*38*	
C (m) (veh/h)	*1193*	*1264*		*464*			*443*	
v/c	*0.04*	*0.02*		*0.11*			*0.09*	
95% queue length	*0.12*	*0.07*		*0.36*			*0.28*	
Control Delay (s/veh)	*8.1*	*7.9*		*13.7*			*13.9*	
LOS	*A*	*A*		*B*			*B*	
Approach Delay (s/veh)	--	--	*13.7*			*13.9*		
Approach LOS	--	--	*B*			*B*		

Copyright © 2005 University of Florida, All Rights Reserved *HCS+*™ Version 5.2 Generated: 9/28/2011 2:49 PM

TWO-WAY STOP CONTROL SUMMARY

General Information		Site Information	
Analyst	*Vargas*	Intersection	*Altara/Laguna*
Agency/Co.	*Traf Tech Engineering, Inc.*	Jurisdiction	*Coral Gables*
Date Performed	*9/28/2011*	Analysis Year	*2013 Background*
Analysis Time Period	*AM Peak Hour*		

Project Description

East/West Street: *Altara Avenue*	North/South Street: *Laguna Street*
Intersection Orientation: *East-West*	Study Period (hrs): *0.25*

Vehicle Volumes and Adjustments

Major Street	Eastbound			Westbound		
Movement	1	2	3	4	5	6
	L	T	R	L	T	R
Volume (veh/h)	*25*	*149*	*16*	*17*	*129*	*74*
Peak-Hour Factor, PHF	*0.53*	*0.53*	*0.53*	*0.53*	*0.53*	*0.53*
Hourly Flow Rate, HFR (veh/h)	*47*	*281*	*30*	*32*	*243*	*139*
Percent Heavy Vehicles	*2*	--	--	*2*	--	--
Median Type	*Undivided*					
RT Channelized			*0*			*0*
Lanes	*0*	*1*	*0*	*0*	*1*	*0*
Configuration	*LTR*			*LTR*		
Upstream Signal		*0*			*0*	

Minor Street	Northbound			Southbound		
Movement	7	8	9	10	11	12
	L	T	R	L	T	R
Volume (veh/h)	*4*	*7*	*17*	*3*	*7*	*11*
Peak-Hour Factor, PHF	*0.53*	*0.53*	*0.53*	*0.53*	*0.53*	*0.53*
Hourly Flow Rate, HFR (veh/h)	*7*	*13*	*32*	*5*	*13*	*20*
Percent Heavy Vehicles	*2*	*2*	*2*	*2*	*2*	*2*
Percent Grade (%)		*0*			*0*	
Flared Approach		*N*			*N*	
Storage		*0*			*0*	
RT Channelized			*0*			*0*
Lanes	*0*	*1*	*0*	*0*	*1*	*0*
Configuration		*LTR*			*LTR*	

Delay, Queue Length, and Level of Service

Approach	Eastbound	Westbound	Northbound			Southbound		
Movement	1	4	7	8	9	10	11	12
Lane Configuration	*LTR*	*LTR*		*LTR*			*LTR*	
v (veh/h)	*47*	*32*		*52*			*38*	
C (m) (veh/h)	*1176*	*1249*		*452*			*425*	
v/c	*0.04*	*0.03*		*0.12*			*0.09*	
95% queue length	*0.12*	*0.08*		*0.39*			*0.29*	
Control Delay (s/veh)	*8.2*	*8.0*		*14.0*			*14.3*	
LOS	*A*	*A*		*B*			*B*	
Approach Delay (s/veh)	--	--	*14.0*			*14.3*		
Approach LOS	--	--	*B*			*B*		

Copyright © 2005 University of Florida, All Rights Reserved *HCS+*™ Version 5.2 Generated: 9/28/2011 2:49 PM

TWO-WAY STOP CONTROL SUMMARY

General Information		Site Information	
Analyst	*Vargas*	Intersection	*Altara/Laguna*
Agency/Co.	*Traf Tech Engineering, Inc.*	Jurisdiction	*Coral Gables*
Date Performed	*9/28/2011*	Analysis Year	*2013 Total w/Project*
Analysis Time Period	*AM Peak Hour*		

Project Description

East/West Street: *Altara Avenue*	North/South Street: *Laguna Street*
Intersection Orientation: *East-West*	Study Period (hrs): *0.25*

Vehicle Volumes and Adjustments

Major Street	Eastbound			Westbound		
Movement	1	2	3	4	5	6
	L	T	R	L	T	R
Volume (veh/h)	*38*	*149*	*16*	*17*	*129*	*78*
Peak-Hour Factor, PHF	*0.53*	*0.53*	*0.53*	*0.53*	*0.53*	*0.53*
Hourly Flow Rate, HFR (veh/h)	*71*	*281*	*30*	*32*	*243*	*147*
Percent Heavy Vehicles	*2*	--	--	*2*	--	--
Median Type	*Undivided*					
RT Channelized			*0*			*0*
Lanes	*0*	*1*	*0*	*0*	*1*	*0*
Configuration	*LTR*			*LTR*		
Upstream Signal		*0*			*0*	

Minor Street	Northbound			Southbound		
Movement	7	8	9	10	11	12
	L	T	R	L	T	R
Volume (veh/h)	*4*	*7*	*17*	*3*	*7*	*74*
Peak-Hour Factor, PHF	*0.53*	*0.53*	*0.53*	*0.53*	*0.53*	*0.53*
Hourly Flow Rate, HFR (veh/h)	*7*	*13*	*32*	*5*	*13*	*139*
Percent Heavy Vehicles	*2*	*2*	*2*	*2*	*2*	*2*
Percent Grade (%)		*0*			*0*	
Flared Approach		*N*			*N*	
Storage		*0*			*0*	
RT Channelized			*0*			*0*
Lanes	*0*	*1*	*0*	*0*	*1*	*0*
Configuration		*LTR*			*LTR*	

Delay, Queue Length, and Level of Service

Approach	Eastbound	Westbound	Northbound			Southbound		
Movement	1	4	7	8	9	10	11	12
Lane Configuration	*LTR*	*LTR*		*LTR*			*LTR*	
v (veh/h)	*71*	*32*		*52*			*157*	
C (m) (veh/h)	*1169*	*1249*		*394*			*603*	
v/c	*0.06*	*0.03*		*0.13*			*0.26*	
95% queue length	*0.19*	*0.08*		*0.45*			*1.04*	
Control Delay (s/veh)	*8.3*	*8.0*		*15.5*			*13.1*	
LOS	*A*	*A*		*C*			*B*	
Approach Delay (s/veh)	--	--	*15.5*			*13.1*		
Approach LOS	--	--	*C*			*B*		

Copyright © 2005 University of Florida, All Rights Reserved *HCS+*™ Version 5.2 Generated: 9/28/2011 2:50 PM

TWO-WAY STOP CONTROL SUMMARY

General Information		Site Information	
Analyst	*Vargas*	Intersection	*Altara/Laguna*
Agency/Co.	*Traf Tech Engineering, Inc.*	Jurisdiction	*Coral Gables*
Date Performed	*9/28/2011*	Analysis Year	*2011 Existing*
Analysis Time Period	*PM Peak Hour*		

Project Description

East/West Street: *Altara Avenue* | North/South Street: *Laguna Street*

Intersection Orientation: *East-West* | Study Period (hrs): *0.25*

Vehicle Volumes and Adjustments

Major Street	Eastbound			Westbound		
Movement	1	2	3	4	5	6
	L	T	R	L	T	R
Volume (veh/h)	*28*	*82*	*20*	*9*	*104*	*27*
Peak-Hour Factor, PHF	*0.68*	*0.68*	*0.68*	*0.68*	*0.68*	*0.68*
Hourly Flow Rate, HFR (veh/h)	*41*	*120*	*29*	*13*	*152*	*39*
Percent Heavy Vehicles	*2*	--	--	*2*	--	--
Median Type	*Undivided*					
RT Channelized			*0*			*0*
Lanes	*0*	*1*	*0*	*0*	*1*	*0*
Configuration	*LTR*			*LTR*		
Upstream Signal		*0*			*0*	

Minor Street	Northbound			Southbound		
Movement	7	8	9	10	11	12
	L	T	R	L	T	R
Volume (veh/h)	*30*	*16*	*29*	*14*	*9*	*28*
Peak-Hour Factor, PHF	*0.68*	*0.68*	*0.68*	*0.68*	*0.68*	*0.68*
Hourly Flow Rate, HFR (veh/h)	*44*	*23*	*42*	*20*	*13*	*41*
Percent Heavy Vehicles	*2*	*2*	*2*	*2*	*2*	*2*
Percent Grade (%)		*0*			*0*	
Flared Approach		*N*			*N*	
Storage		*0*			*0*	
RT Channelized			*0*			*0*
Lanes	*0*	*1*	*0*	*0*	*1*	*0*
Configuration		*LTR*			*LTR*	

Delay, Queue Length, and Level of Service

Approach	Eastbound	Westbound	Northbound			Southbound		
Movement	1	4	7	8	9	10	11	12
Lane Configuration	*LTR*	*LTR*		*LTR*			*LTR*	
v (veh/h)	*41*	*13*		*109*			*74*	
C (m) (veh/h)	*1383*	*1432*		*590*			*637*	
v/c	*0.03*	*0.01*		*0.18*			*0.12*	
95% queue length	*0.09*	*0.03*		*0.67*			*0.39*	
Control Delay (s/veh)	*7.7*	*7.5*		*12.5*			*11.4*	
LOS	*A*	*A*		*B*			*B*	
Approach Delay (s/veh)	--	--	*12.5*			*11.4*		
Approach LOS	--	--	*B*			*B*		

Copyright © 2005 University of Florida, All Rights Reserved *HCS+*™ Version 5.2 Generated: 9/28/2011 2:50 PM

TWO-WAY STOP CONTROL SUMMARY

General Information		Site Information	
Analyst	*Vargas*	Intersection	*Altara/Laguna*
Agency/Co.	*Traf Tech Engineering, Inc.*	Jurisdiction	*Coral Gables*
Date Performed	*9/28/2011*	Analysis Year	*2013 Background*
Analysis Time Period	*PM Peak Hour*		

Project Description

East/West Street: *Altara Avenue* | North/South Street: *Laguna Street*

Intersection Orientation: *East-West* | Study Period (hrs): *0.25*

Vehicle Volumes and Adjustments

Major Street	Eastbound			Westbound		
Movement	1	2	3	4	5	6
	L	T	R	L	T	R
Volume (veh/h)	*29*	*85*	*21*	*9*	*108*	*28*
Peak-Hour Factor, PHF	*0.68*	*0.68*	*0.68*	*0.68*	*0.68*	*0.68*
Hourly Flow Rate, HFR (veh/h)	*42*	*124*	*30*	*13*	*158*	*41*
Percent Heavy Vehicles	*2*	--	--	*2*	--	--
Median Type	*Undivided*					
RT Channelized			*0*			*0*
Lanes	*0*	*1*	*0*	*0*	*1*	*0*
Configuration	*LTR*			*LTR*		
Upstream Signal		*0*			*0*	

Minor Street	Northbound			Southbound		
Movement	7	8	9	10	11	12
	L	T	R	L	T	R
Volume (veh/h)	*31*	*17*	*30*	*15*	*9*	*29*
Peak-Hour Factor, PHF	*0.68*	*0.68*	*0.68*	*0.68*	*0.68*	*0.68*
Hourly Flow Rate, HFR (veh/h)	*45*	*24*	*44*	*22*	*13*	*42*
Percent Heavy Vehicles	*2*	*2*	*2*	*2*	*2*	*2*
Percent Grade (%)		*0*			*0*	
Flared Approach		*N*			*N*	
Storage		*0*			*0*	
RT Channelized			*0*			*0*
Lanes	*0*	*1*	*0*	*0*	*1*	*0*
Configuration		*LTR*			*LTR*	

Delay, Queue Length, and Level of Service

Approach	Eastbound	Westbound	Northbound			Southbound		
Movement	1	4	7	8	9	10	11	12
Lane Configuration	*LTR*	*LTR*		*LTR*			*LTR*	
v (veh/h)	*42*	*13*		*113*			*77*	
C (m) (veh/h)	*1373*	*1426*		*580*			*622*	
v/c	*0.03*	*0.01*		*0.19*			*0.12*	
95% queue length	*0.09*	*0.03*		*0.72*			*0.42*	
Control Delay (s/veh)	*7.7*	*7.5*		*12.7*			*11.6*	
LOS	*A*	*A*		*B*			*B*	
Approach Delay (s/veh)	--	--	*12.7*			*11.6*		
Approach LOS	--	--	*B*			*B*		

Copyright © 2005 University of Florida, All Rights Reserved *HCS+*™ Version 5.2 Generated: 9/28/2011 2:50 PM

TWO-WAY STOP CONTROL SUMMARY

General Information		Site Information	
Analyst	*Vargas*	Intersection	*Altara/Laguna*
Agency/Co.	*Traf Tech Engineering, Inc.*	Jurisdiction	*Coral Gables*
Date Performed	*9/28/2011*	Analysis Year	*2013 Total w/Project*
Analysis Time Period	*PM Peak Hour*		

Project Description

East/West Street: *Altara Avenue* | North/South Street: *Laguna Street*

Intersection Orientation: *East-West* | Study Period (hrs): *0.25*

Vehicle Volumes and Adjustments

Major Street	Eastbound			Westbound		
Movement	1	2	3	4	5	6
	L	T	R	L	T	R
Volume (veh/h)	*92*	*85*	*21*	*9*	*108*	*50*
Peak-Hour Factor, PHF	*0.68*	*0.68*	*0.68*	*0.68*	*0.68*	*0.68*
Hourly Flow Rate, HFR (veh/h)	*135*	*124*	*30*	*13*	*158*	*73*
Percent Heavy Vehicles	*2*	--	--	*2*	--	--
Median Type	*Undivided*					
RT Channelized			*0*			*0*
Lanes	*0*	*1*	*0*	*0*	*1*	*0*
Configuration	*LTR*			*LTR*		
Upstream Signal		*0*			*0*	

Minor Street	Northbound			Southbound		
Movement	7	8	9	10	11	12
	L	T	R	L	T	R
Volume (veh/h)	*31*	*17*	*30*	*15*	*9*	*76*
Peak-Hour Factor, PHF	*0.68*	*0.68*	*0.68*	*0.68*	*0.68*	*0.68*
Hourly Flow Rate, HFR (veh/h)	*45*	*24*	*44*	*22*	*13*	*111*
Percent Heavy Vehicles	*2*	*2*	*2*	*2*	*2*	*2*
Percent Grade (%)		*0*			*0*	
Flared Approach		*N*			*N*	
Storage		*0*			*0*	
RT Channelized			*0*			*0*
Lanes	*0*	*1*	*0*	*0*	*1*	*0*
Configuration		*LTR*			*LTR*	

Delay, Queue Length, and Level of Service

Approach	Eastbound	Westbound	Northbound			Southbound		
Movement	1	4	7	8	9	10	11	12
Lane Configuration	*LTR*	*LTR*		*LTR*			*LTR*	
v (veh/h)	*135*	*13*		*113*			*146*	
C (m) (veh/h)	*1337*	*1426*		*398*			*606*	
v/c	*0.10*	*0.01*		*0.28*			*0.24*	
95% queue length	*0.34*	*0.03*		*1.15*			*0.94*	
Control Delay (s/veh)	*8.0*	*7.5*		*17.6*			*12.8*	
LOS	*A*	*A*		*C*			*B*	
Approach Delay (s/veh)	--	--	*17.6*			*12.8*		
Approach LOS	--	--	*C*			*B*		

Copyright © 2005 University of Florida, All Rights Reserved *HCS+*™ Version 5.2 Generated: 9/28/2011 2:51 PM

TWO-WAY STOP CONTROL SUMMARY

General Information		Site Information	
Analyst	*Vargas*	Intersection	*Laguna Street/Driveway*
Agency/Co.	*Traf Tech Engineering, Inc.*	Jurisdiction	*Coral Gables*
Date Performed	*9/28/2011*	Analysis Year	*2013 Total w/Project*
Analysis Time Period	*AM Peak Hour*		

Project Description

East/West Street: *Driveway*	North/South Street: *Laguna Street*
Intersection Orientation: *North-South*	Study Period (hrs): *0.25*

Vehicle Volumes and Adjustments

Major Street	Northbound			Southbound		
Movement	1	2	3	4	5	6
	L	T	R	L	T	R
Volume (veh/h)	*17*	*106*			*22*	*5*
Peak-Hour Factor, PHF	*0.90*	*0.90*	*0.90*	*0.90*	*0.90*	*0.90*
Hourly Flow Rate, HFR (veh/h)	*17*	*0*	*70*	*0*	*0*	*0*
Percent Heavy Vehicles	*0*	--	--	*0*	--	--
Median Type	*Undivided*					
RT Channelized			*0*			*0*
Lanes	*0*	*1*	*0*	*0*	*1*	*0*
Configuration	*LT*					*TR*
Upstream Signal		*0*			*0*	

Minor Street	Eastbound			Westbound		
Movement	7	8	9	10	11	12
	L	T	R	L	T	R
Volume (veh/h)	*16*		*63*			
Peak-Hour Factor, PHF	*0.90*	*0.90*	*0.90*	*0.90*	*0.90*	*0.90*
Hourly Flow Rate, HFR (veh/h)	*0*	*24*	*5*	*18*	*117*	*0*
Percent Heavy Vehicles	*0*	*0*	*0*	*0*	*0*	*0*
Percent Grade (%)		*0*			*0*	
Flared Approach		*N*			*N*	
Storage		*0*			*0*	
RT Channelized			*0*			*0*
Lanes	*0*	*0*	*0*	*0*	*0*	*0*
Configuration		*LR*				

Delay, Queue Length, and Level of Service

Approach	Northbound	Southbound	Westbound			Eastbound		
Movement	1	4	7	8	9	10	11	12
Lane Configuration	*LT*						*LR*	
v (veh/h)	*18*						*87*	
C (m) (veh/h)	*1597*						*996*	
v/c	*0.01*						*0.09*	
95% queue length	*0.03*						*0.29*	
Control Delay (s/veh)	*7.3*						*9.0*	
LOS	*A*						*A*	
Approach Delay (s/veh)	--	--				*9.0*		
Approach LOS	--	--				*A*		

Copyright © 2005 University of Florida, All Rights Reserved *HCS+*™ Version 5.2 Generated: 9/28/2011 2:51 PM

TWO-WAY STOP CONTROL SUMMARY

General Information		Site Information	
Analyst	*Vargas*	Intersection	*Laguna Street/Driveway*
Agency/Co.	*Traf Tech Engineering, Inc.*	Jurisdiction	*Coral Gables*
Date Performed	*9/28/2011*	Analysis Year	*2013 Total w/Project*
Analysis Time Period	*PM Peak Hour*		

Project Description

East/West Street: *Driveway*	North/South Street: *Laguna Street*
Intersection Orientation: *North-South*	Study Period (hrs): *0.25*

Vehicle Volumes and Adjustments

Major Street	Northbound			Southbound		
Movement	1	2	3	4	5	6
	L	T	R	L	T	R
Volume (veh/h)	*85*	*74*			*53*	*24*
Peak-Hour Factor, PHF	*0.90*	*0.90*	*0.90*	*0.90*	*0.90*	*0.90*
Hourly Flow Rate, HFR (veh/h)	*13*	*0*	*52*	*0*	*0*	*0*
Percent Heavy Vehicles	*0*	--	--	*0*	--	--
Median Type	*Undivided*					
RT Channelized			*0*			*0*
Lanes	*0*	*1*	*0*	*0*	*1*	*0*
Configuration	*LT*					*TR*
Upstream Signal		*0*			*0*	

Minor Street	Eastbound			Westbound		
Movement	7	8	9	10	11	12
	L	T	R	L	T	R
Volume (veh/h)	*12*		*47*			
Peak-Hour Factor, PHF	*0.90*	*0.90*	*0.90*	*0.90*	*0.90*	*0.90*
Hourly Flow Rate, HFR (veh/h)	*0*	*58*	*26*	*94*	*82*	*0*
Percent Heavy Vehicles	*0*	*0*	*0*	*0*	*0*	*0*
Percent Grade (%)		*0*			*0*	
Flared Approach		*N*			*N*	
Storage		*0*			*0*	
RT Channelized			*0*			*0*
Lanes	*0*	*0*	*0*	*0*	*0*	*0*
Configuration		*LR*				

Delay, Queue Length, and Level of Service

Approach	Northbound	Southbound	Westbound			Eastbound		
Movement	1	4	7	8	9	10	11	12
Lane Configuration	*LT*						*LR*	
v (veh/h)	*94*						*65*	
C (m) (veh/h)	*1526*						*888*	
v/c	*0.06*						*0.07*	
95% queue length	*0.20*						*0.24*	
Control Delay (s/veh)	*7.5*						*9.4*	
LOS	*A*						*A*	
Approach Delay (s/veh)	--	--				*9.4*		
Approach LOS	--	--				*A*		

Copyright © 2005 University of Florida, All Rights Reserved *HCS+*™ Version 5.2 Generated: 9/28/2011 2:51 PM